MODEL: PJ-036BH-SMT-TR | DESCRIPTION: DC POWER JACK

FEATURES

- 2.5 mm center pin
- 5.0 A rating
- horizontal orientation
- surface mount (SMT)

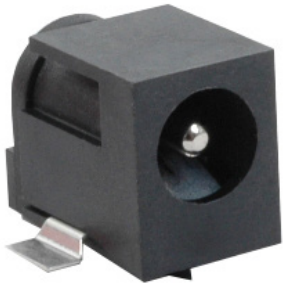

RoHS

SPECIFICATIONS

parameter	conditions/description	min	typ	max	units
rated input voltage			24		Vdc
rated input current				5	A
contact resistance				30	mΩ
insulation resistance	at 500 Vdc	100			MΩ
voltage withstand	for 1 minute			500	Vac
insertion/withdrawal force		0.3		3	kg
operating temperature		-25		85	°C
life			5,000		cycles
flammability rating	UL94V-0				
RoHS	yes				

SOLDERABILITY

parameter	conditions/description	min	typ	max	units
reel storage	-5~35°C, 25~80% humidity reel opened: use within 1 month reel unopened: use within 6 months				
reflow soldering	see reflow profile			260	°C

Note: 1. CUI Devices recommends usage of the product within 2 hours after TBR is opened. After 6 hours, CUI Devices recommends drying the parts prior to use.

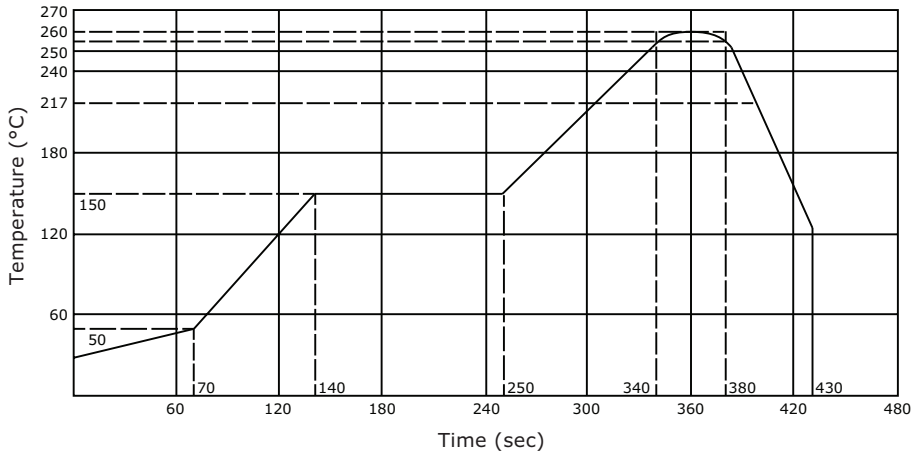

MECHANICAL DRAWING

units: mm
tolerance:
X. ±0.50 mm
X.X ±0.30 mm
X.XX ±0.20 mm
PCB: ±0.05 mm
unless otherwise specified

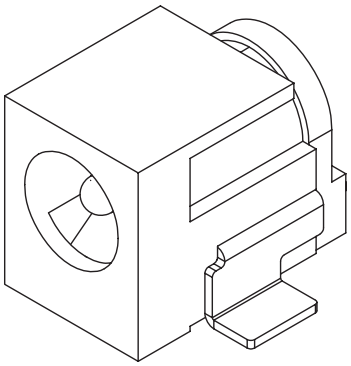

DESCRIPTION	MATERIAL	PLATING/COLOR
center pin	copper	nickel
terminal 1	brass	silver
terminal 2	copper alloy	silver
terminal 3	brass	silver
housing	PA10T (UL94V-0)	black

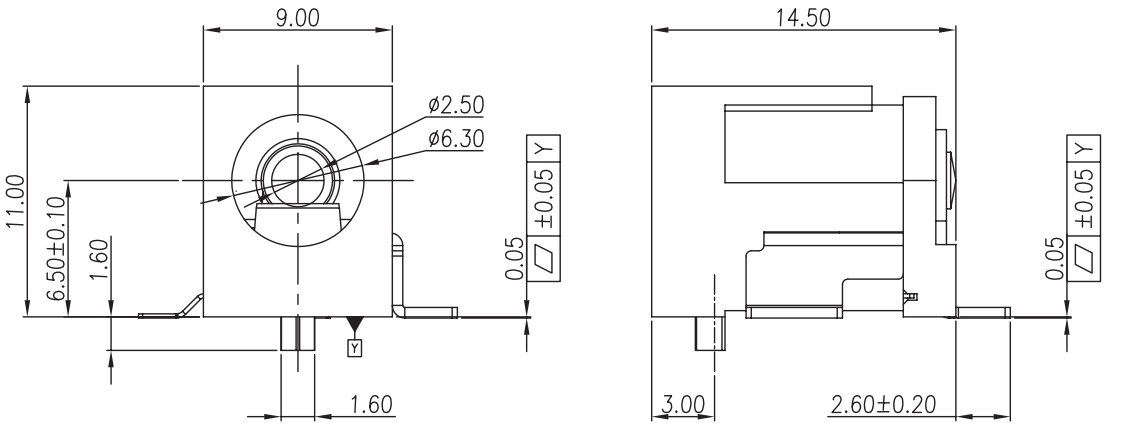

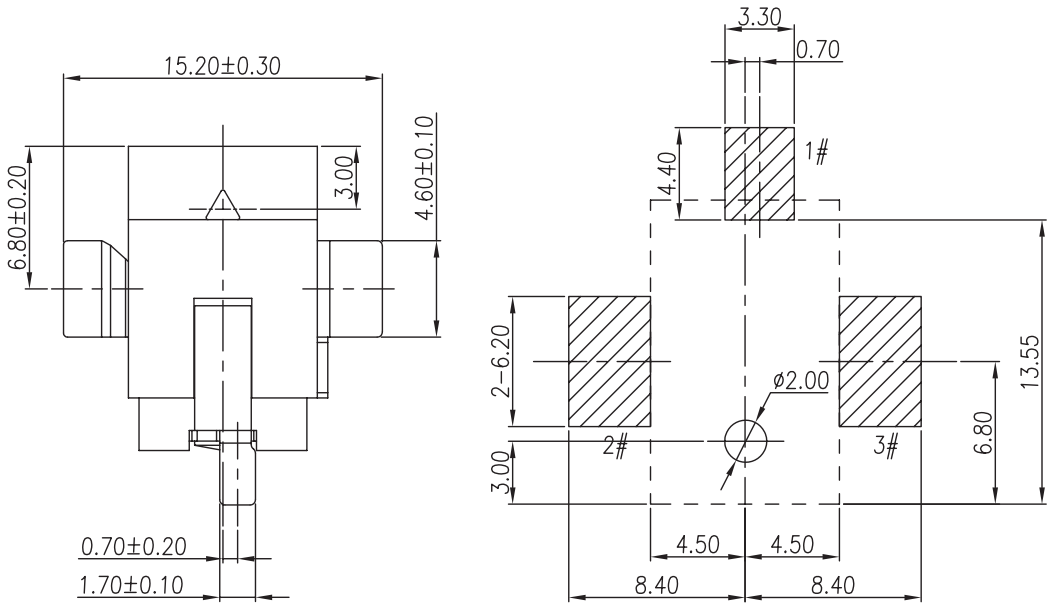

Recommended PCB Layout
Top View

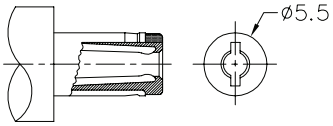

MATING PLUG
Jack Insertion Depth: 9.15 mm

SCHEMATIC	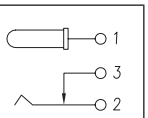
Model	PJ-036BH-SMT
Center Pin	Ø2.5 mm

PACKAGING

units: mm

Reel Size: Ø380 mm
Reel QTY: 350 pcs per reel

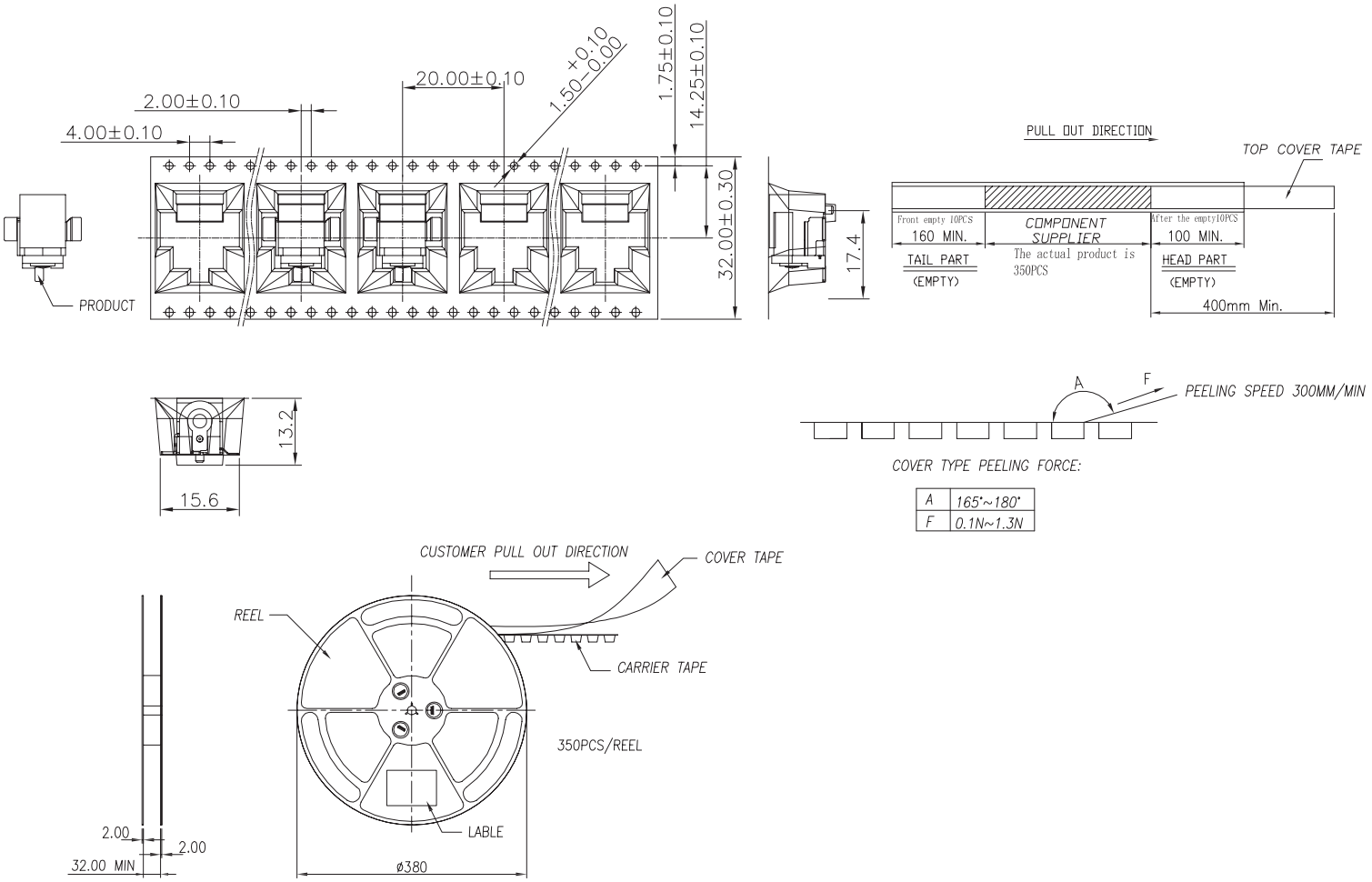

REVISION HISTORY

rev.	description	date
1.0	initial release	02/02/2007
1.01	added TR package option	11/07/2012
1.02	applied new spec template, updated center pin material	08/21/2013
1.03	increased voltage rating	04/14/2016
1.04	added storage and drying conditions, and tape and reel packaging details	10/17/2017
1.05	brand update	11/06/2019
1.06	logo, datasheet style update	08/05/2022
1.07	updated datasheet	08/10/2022

The revision history provided is for informational purposes only and is believed to be accurate.

CUI Devices offers a one (1) year limited warranty. Complete warranty information is listed on our website.

CUI Devices reserves the right to make changes to the product at any time without notice. Information provided by CUI Devices is believed to be accurate and reliable. However, no responsibility is assumed by CUI Devices for its use, nor for any infringements of patents or other rights of third parties which may result from its use.

CUI Devices products are not authorized or warranted for use as critical components in equipment that requires an extremely high level of reliability. A critical component is any component of a life support device or system whose failure to perform can be reasonably expected to cause the failure of the life support device or system, or to affect its safety or effectiveness.

cuidevices.com