Data sheet

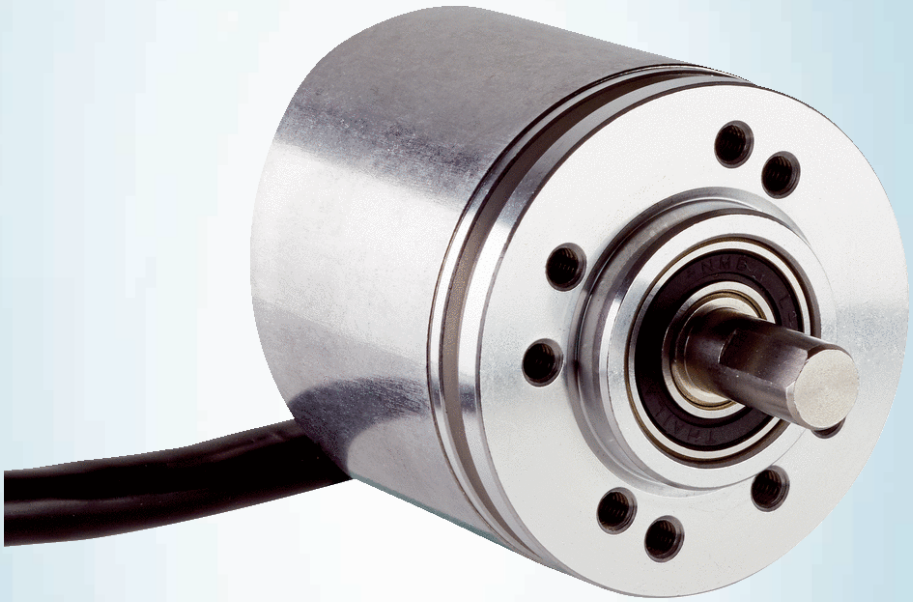

# DBS36E-S3CK00100

## DBS36/50

INCREMENTAL ENCODERS

SICK
Sensor Intelligence.

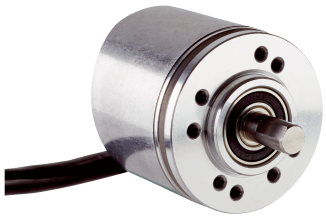

Illustration may differ

## Ordering information

| Type | part no. |
|---|---|
| DBS36E-S3CK00100 | 1063772 |

Other models and accessories ➜ www.sick.com/DBS36_50

## Detailed technical data

### Safety-related parameters

| | |
|---|---|
| **$MTTF_D$ (mean time to dangerous failure)** | 600 years (EN ISO 13849-1) [1] |

[1] This product is a standard product and does not constitute a safety component as defined in the Machinery Directive. Calculation based on nominal load of components, average ambient temperature 40 °C, frequency of use 8760 h/a. All electronic failures are considered hazardous. For more information, see document no. 8015532.

### Performance

| | |
|---|---|
| **Pulses per revolution** | 100 |
| **Measuring step** | 90°, electric/pulses per revolution |
| **Measuring step deviation** | ± 18° / pulses per revolution |
| **Error limits** | ± 54° / pulses per revolution |
| **Duty cycle** | ≤ 0.5 ± 5 % |

### Interfaces

| | |
|---|---|
| **Communication interface** | Incremental |
| **Communication Interface detail** | TTL / RS-422 |
| **Number of signal channels** | 6-channel |
| **Initialization time** | < 3 ms |
| **Output frequency** | ≤ 300 kHz |
| **Load current** | ≤ 30 mA |
| **Power consumption** | ≤ 0.5 W (without load) |

### Electronics

| | |
|---|---|
| **Connection type** | Cable, 8-wire, universal, 1.5 m |
| **Supply voltage** | 7 ... 30 V |
| **Reference signal, number** | 1 |
| **Reference signal, position** | 90°, electric, logically gated with A and B |
| **Reverse polarity protection** | ✓ |
| **Short-circuit protection of the outputs** | ✓ [1] |

[1] The short-circuit rating is only given if Us and GND are connected correctly.

## Mechanics

| | |
|---|---|
| **Mechanical design** | Solid shaft, face mount flange |
| **Shaft diameter** | 6 mmWith flat |
| **Shaft length** | 12 mm |
| **Weight** | + 150 g (with connecting cable) |
| **Shaft material** | Stainless steel |
| **Flange material** | Aluminum |
| **Housing material** | Aluminum |
| **Material, cable** | PVC |
| **Start up torque** | + 0.5 Ncm (+20 °C) |
| **Operating torque** | 0.4 Ncm (+20 °C) |
| **Permissible shaft loading** | 40 N (radial) [1]<br>20 N (axial) |
| **Operating speed** | 6,000 $min^{-1}$ [2] |
| **Maximum operating speed** | ≤ 8,000 $min^{-1}$ [3] |
| **Moment of inertia of the rotor** | 0.6 $gcm^2$ |
| **Bearing lifetime** | 2 x 10^9 revolutions |
| **Angular acceleration** | ≤ 500,000 $rad/s^2$ |

[1] Higher values are possible using limited bearing life.
[2] Allow for self-heating of 3.3 K per 1,000 rpm when designing the operating temperature range.
[3] No permanent operation. Decreasing signal quality.

## Ambient data

| | |
|---|---|
| **EMC** | According to EN 61000-6-2 and EN 61000-6-3 (class A) |
| **Enclosure rating** | IP65 |
| **Permissible relative humidity** | 90 % (Condensation not permitted) |
| **Operating temperature range** | –20 °C ... +85 °C, –35 °C ... +95 °C on request |
| **Storage temperature range** | –40 °C ... +100 °C, without package |
| **Resistance to shocks** | 100 g, 6 ms (EN 60068-2-27) |
| **Resistance to vibration** | 20 g, 10 Hz ... 2,000 Hz (EN 60068-2-6) |

## Classifications

| | |
|---|---|
| **ECLASS 5.0** | 27270501 |
| **ECLASS 5.1.4** | 27270501 |
| **ECLASS 6.0** | 27270590 |
| **ECLASS 6.2** | 27270590 |
| **ECLASS 7.0** | 27270501 |
| **ECLASS 8.0** | 27270501 |
| **ECLASS 8.1** | 27270501 |
| **ECLASS 9.0** | 27270501 |
| **ECLASS 10.0** | 27270501 |
| **ECLASS 11.0** | 27270501 |
| **ECLASS 12.0** | 27270501 |

| | |
|---|---|
| **ETIM 5.0** | EC001486 |
| **ETIM 6.0** | EC001486 |
| **ETIM 7.0** | EC001486 |
| **ETIM 8.0** | EC001486 |
| **UNSPSC 16.0901** | 41112113 |

## Certificates

| | |
|---|---|
| **EU declaration of conformity** | ✓ |
| **UK declaration of conformity** | ✓ |
| **ACMA declaration of conformity** | ✓ |
| **China-RoHS** | ✓ |
| **cRUus certificate** | ✓ |

## Dimensional drawing Solid shaft, face mount flange, shaft 6 mm x 12 mm, type 0 flange design hole pattern

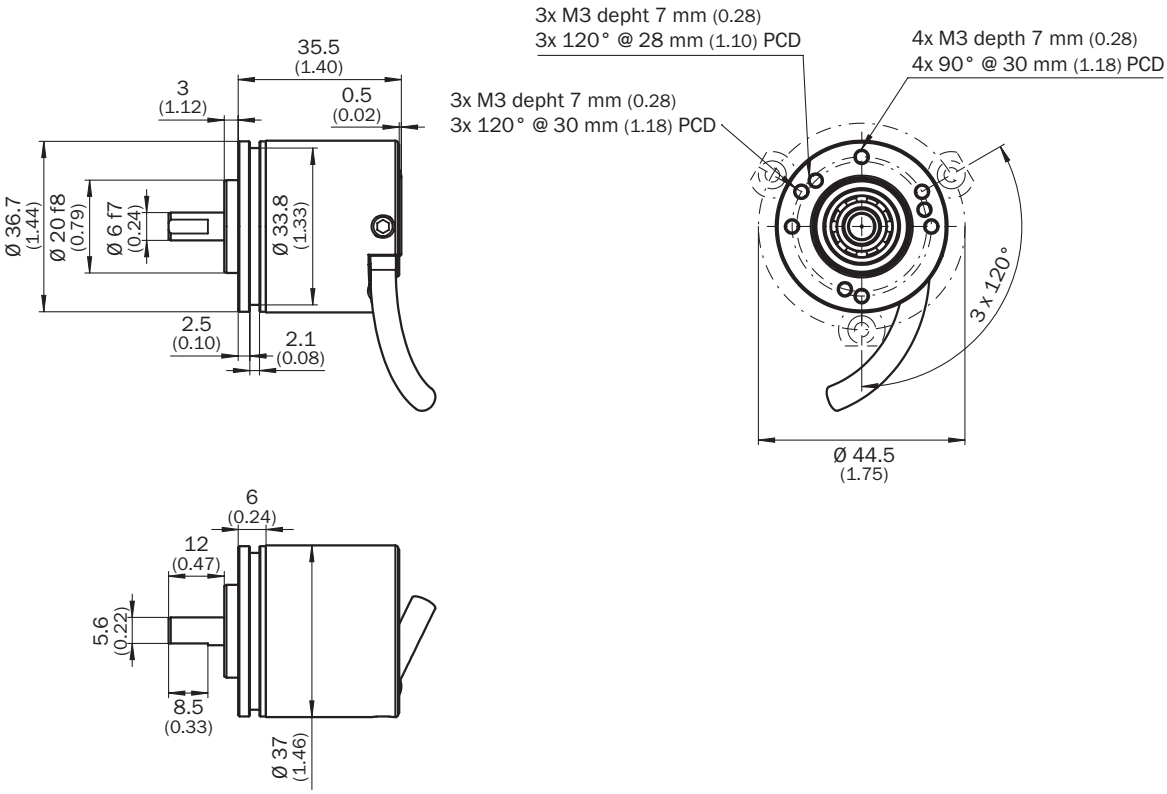


Dimensions in mm (inch)

## PIN assignment

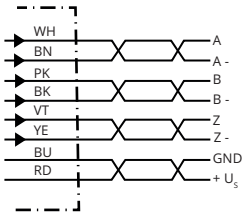


| Wire colors (cable connection) | Male connector M12, 8-pin | Male connector M23, 12-pin | TTL/HTL 6-channel signal | Explanation |
|---|---|---|---|---|
| Brown | 1 | 6 | A- | Signal wire |
| White | 2 | 5 | A | Signal wire |
| Black | 3 | 1 | B- | Signal wire |
| Pink | 4 | 8 | B | Signal wire |
| Yellow | 5 | 4 | Z- | Signal wire |
| Purple | 6 | 3 | Z | Signal wire |
| Blue | 7 | 10 | GND | Ground connection |
| Red | 8 | 12 | +$U_s$ | Supply voltage |
| - | - | 9 | Not assigned | Not assigned |
| - | - | 2 | Not assigned | Not assigned |
| - | - | 11 | Not assigned | Not assigned |
| - | - | 7 | Not assigned | Not assigned |

## Diagrams Signal outputs for electrical interfaces TTL and HTL

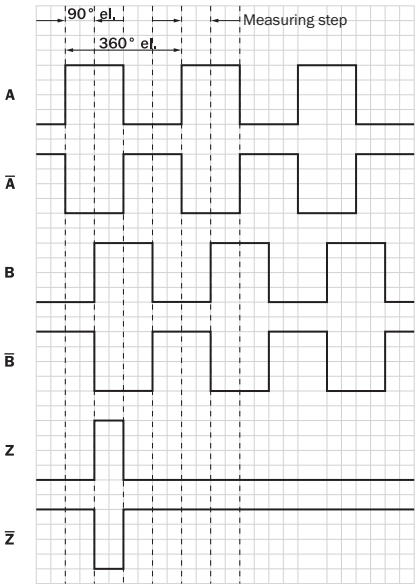


Cw with view on the encoder shaft in direction "A", compare dimensional drawing.
① Interfaces G, P, R only for channels A, B, Z.

| Supply voltage | Output |
|---|---|
| 4.5 V...5.5 V | TTL/RS422 |

| Supply voltage | Output |
|---|---|
| 7 V...30 V | TTL/RS422 |
| 7 V...30 V | HTL/Push Pull |
| 7 V...27 V | HTL/push pull, 3 channel |
| 4.5 V...5.5 V | Open Collector NPN, 3 channel |
| 4.5 V...30 V | Open Collector NPN, 3 channel |

## Operation note Zero pulse explanation

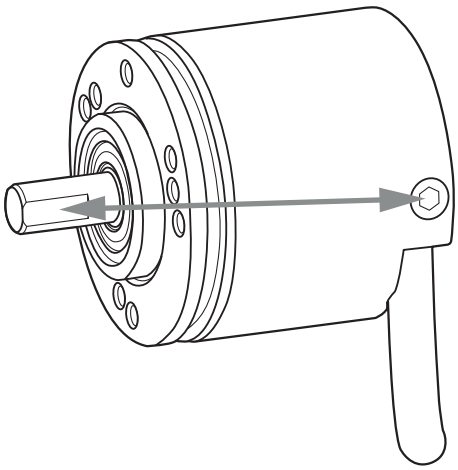

## Recommended accessories

Other models and accessories ➜ www.sick.com/DBS36_50

| | Brief description | Type | part no. |
|---|---|---|---|
| connectors and cables | | | |
|  | • **Connection type head A:** Flying leads<br>• **Connection type head B:** Flying leads<br>• **Signal type:** SSI, Incremental, HIPERFACE®<br>• **Items supplied:** By the meter<br>• **Cable:** 8-wire, PUR, halogen-free<br>• **Description:** SSI, shielded, Incremental, HIPERFACE® | LTG-2308-MWENC | 6027529 |
|  | • **Connection type head A:** Flying leads<br>• **Connection type head B:** Flying leads<br>• **Signal type:** SSI, Incremental<br>• **Items supplied:** By the meter<br>• **Cable:** 11-wire, PUR<br>• **Description:** SSI, shielded, Incremental | LTG-2411-MW | 6027530 |
|  | • **Connection type head A:** Flying leads<br>• **Connection type head B:** Flying leads<br>• **Signal type:** SSI, Incremental<br>• **Items supplied:** By the meter<br>• **Cable:** 12-wire, PUR, halogen-free<br>• **Description:** SSI, shielded, Incremental | LTG-2512-MW | 6027531 |
|  | • **Connection type head A:** Flying leads<br>• **Connection type head B:** Flying leads<br>• **Signal type:** SSI, TTL, HTL, Incremental<br>• **Items supplied:** By the meter<br>• **Cable:** 12-wire, UV and saltwater-resistant, PUR, halogen-free<br>• **Description:** SSI, shielded, TTL, HTL, Incremental | LTG-2612-MW | 6028516 |
|  | • **Connection type head A:** Male connector, M12, 8-pin, straight, A-coded<br>• **Signal type:** Incremental<br>• **Cable:** CAT5, CAT5e<br>• **Description:** Incremental, shielded<br>• **Connection systems:** IDC quick connection<br>• **Permitted cross-section:** 0.14 mm² ... 0.34 mm² | STE-1208-GA01 | 6044892 |
|  | • **Connection type head A:** Male connector, M23, 12-pin, straight, A-coded<br>• **Signal type:** HIPERFACE®, SSI, Incremental<br>• **Description:** HIPERFACE®, shieldedSSIIncremental<br>• **Connection systems:** Solder connection | STE-2312-GX | 6028548 |
|  | • **Connection type head A:** Male connector, M23, 12-pin, straight, A-coded<br>• **Signal type:** HIPERFACE®, SSI, Incremental<br>• **Description:** HIPERFACE®, shieldedSSIIncremental<br>• **Connection systems:** Solder connection | STE-2312-G01 | 2077273 |
| Mounting systems | | | |
|  | • **Description:** Flange adapter, adapts face mount flange with 20 mm centering collar to 33 mm servo flange<br>• **Material:** Aluminum<br>• **Details:** Aluminum | BEF-FA-020-033 | 2066312 |

| | Brief description | Type | part no. |
|---|---|---|---|
| measuring wheels and measuring wheel mechanics | | | |
|  | • **Product segment:** Measuring wheels and measuring wheel mechanics<br>• **Product family:** Measuring wheels<br>• **Description:** Aluminium measuring wheel with O-ring (NBR70) for 6 mm solid shaft, circumference 200 mm | BEF-MR006020R | 2055222 |
|  | • **Product segment:** Measuring wheels and measuring wheel mechanics<br>• **Product family:** Measuring wheels<br>• **Description:** Measuring wheel with O-ring (NBR70) for 6 mm solid shaft, circumference 300 mm | BEF-MR006030R | 2055634 |
|  | • **Product segment:** Measuring wheels and measuring wheel mechanics<br>• **Product family:** Measuring wheels<br>• **Description:** Aluminium measuring wheel with O-ring (NBR70) for 6 mm solid shaft, circumference 500 mm | BEF-MR006050R | 2055225 |
|  | • **Product segment:** Measuring wheels and measuring wheel mechanics<br>• **Product family:** Measuring wheels<br>• **Description:** Aluminum measuring wheel with cross-knurled surface for 6 mm solid shaft, circumference 200 mm | BEF-MR06200AK | 4084745 |
|  | • **Product segment:** Measuring wheels and measuring wheel mechanics<br>• **Product family:** Measuring wheels<br>• **Description:** Aluminum measuring wheel with smooth polyurethane surface for 6 mm solid shaft, circumference 200 mm | BEF-MR06200AP | 4084746 |
|  | • **Product segment:** Measuring wheels and measuring wheel mechanics<br>• **Product family:** Measuring wheels<br>• **Description:** Aluminum measuring wheel with ridged polyurethane surface for 6 mm solid shaft, circumference 200 mm | BEF-MR06200APG | 4084748 |
|  | • **Product segment:** Measuring wheels and measuring wheel mechanics<br>• **Product family:** Measuring wheels<br>• **Description:** Aluminum measuring wheel with studded polyurethane surface for 6 mm solid shaft, circumference 200 mm | BEF-MR06200APN | 4084747 |
| | • **Product segment:** Measuring wheels and measuring wheel mechanics<br>• **Product family:** Measuring wheel mechanics<br>• **Description:** O-ring for measuring wheels (circumference 200 mm) | BEF-OR-053-040 | 2064061 |
| | • **Product segment:** Measuring wheels and measuring wheel mechanics<br>• **Product family:** Measuring wheel mechanics<br>• **Description:** O-ring for measuring wheels (circumference 300 mm) | BEF-OR-083-050 | 2064076 |

| | Brief description | Type | part no. |
|---|---|---|---|
| | • **Items supplied:** 2x O-ring | | |
| | • **Product segment:** Measuring wheels and measuring wheel mechanics<br>• **Product family:** Measuring wheel mechanics<br>• **Description:** O-ring for measuring wheels (circumference 500 mm) | BEF-OR-145-050 | 2064074 |
| shaft adaptation | | | |
|  | • **Product segment:** Shaft adaptation<br>• **Product:** Shaft couplings<br>• **Description:** Bellows coupling, shaft diameter 6 mm / 6 mm, maximum shaft offset: radial ± 0.25 mm, axial ± 0.4 mm, angular +/- 4°; max. speed 10,000 rpm, –30 °C to +120 °C, max. torque 120 Ncm; material: stainless steel bellows, aluminum hub | KUP-0606-B | 5312981 |
|  | • **Product segment:** Shaft adaptation<br>• **Product:** Shaft couplings<br>• **Description:** Cross-slotted coupling, shaft diameter 6 mm / 6 mm, maximum shaft offset: radial ± 0.3 mm, axial ± 0.2 mm, angle ± 3°; max. speed 10,000 rpm, –10° to +80 °C, max. torque 80 Ncm; material: fiber-glass reinforced polyamide, aluminum hub | KUP-0606-S | 2056406 |
|  | • **Product segment:** Shaft adaptation<br>• **Product:** Shaft couplings<br>• **Description:** Bar coupling, shaft diameter 6 mm /8 mm, maximum shaft offset radial ± 0.3 mm, axial ± 0.2 mm, angle ± 3°, max. speed 10,000 rpm, torsion spring rigidity 38 Nm/wheel; material: fiber-glass reinforced polyamide, aluminum hub | KUP-0608-S | 5314179 |
|  | • **Product segment:** Shaft adaptation<br>• **Product:** Shaft couplings<br>• **Description:** Bellows coupling, shaft diameter 6 mm / 10 mm, maximum shaft offset: radial ± 0.25 mm, axial ± 0.4 mm, angular +/- 4°; max. speed 10,000 rpm, –30 °C to +120 °C, max. torque 120 Ncm; material: stainless steel bellows, aluminum hub | KUP-0610-B | 5312982 |
|  | • **Product segment:** Shaft adaptation<br>• **Product:** Shaft couplings<br>• **Description:** Double loop coupling, shaft diameter 6 mm / 10 mm, max. shaft offset: radially +/- 2,5 mm, axially +/-3 mm, angle +/- 10 degrees;max. speed 3.000 rpm, –30 to +80 degrees Celsius, torsional spring stiffness of 25 Nm/rad | KUP-0610-D | 5326697 |
|  | • **Product segment:** Shaft adaptation<br>• **Product:** Shaft couplings<br>• **Description:** Spring washer coupling, shaft diameter 6 mm / 10 mm, Maximum shaft offset: radial +/- 0.3 mm, axial +/- 0.4 mm, angular +/- 2.5°; max. speed 12,000 rpm, –10° to +80 °C, max. torque 60 Ncm; material: aluminum flange, glass fiber-reinforced polyamide membrane and hardened steel coupling pin | KUP-0610-F | 5312985 |
|  | • **Product segment:** Shaft adaptation<br>• **Product:** Shaft couplings<br>• **Description:** Bar coupling, shaft diameter 6 mm / 10 mm, max. shaft offset: radial ± 0,3 mm, axial ± 0,3 mm, angular ± 3°; max. speed 10.000 rpm, –10° to +80 °C, max. torque: 80 Ncm, material: fiber-glass reinforced polyamide, aluminum hub | KUP-0610-S | 2056407 |
|  | • **Product segment:** Shaft adaptation<br>• **Product:** Shaft couplings<br>• **Description:** Claw coupling, shaft diameter 6 mm / 10 mm, damping element 80 shore blue, maximum shaft offset: radial ± 0.22 mm, axial ± 1 mm angular ± 1.3°, max. speed 19,000 rpm, angle of twist max. 10°, –30 °C to +80 °C, max. torque 800 Ncm, tightening torque of screws: ISO 4029 150 Ncm, material: aluminum flange, damping element: polyurethane | KUP-0610-J | 2127056 |

# SICK AT A GLANCE

SICK is one of the leading manufacturers of intelligent sensors and sensor solutions for industrial applications. A unique range of products and services creates the perfect basis for controlling processes securely and efficiently, protecting individuals from accidents and preventing damage to the environment.

We have extensive experience in a wide range of industries and understand their processes and requirements. With intelligent sensors, we can deliver exactly what our customers need. In application centers in Europe, Asia and North America, system solutions are tested and optimized in accordance with customer specifications. All this makes us a reliable supplier and development partner.

Comprehensive services complete our offering: SICK LifeTime Services provide support throughout the machine life cycle and ensure safety and productivity.

**For us, that is “Sensor Intelligence.”**

# WORLDWIDE PRESENCE:

Contacts and other locations –www.sick.com