Product data sheet

Specifications



Circuit breaker, PowerPacT B, 30A, 3 pole, 600Y/347VAC, 25kA, terminal nut, thermal magnetic, 80%

BJF36030

Main

Range	PowerPact
Product name	PowerPact B
Device short name	BJ 030
Product or component type	Circuit breaker
Device application	Distribution

Complementary

[In] rated current	30 A
Number of Poles	3P
Protected poles description	3t
Control type	Toggle
Breaking capacity code	J
Breaking capacity	100 kA at 208Y/120 V AC 50/60 Hz conforming to UL 489 100 kA at 240 V AC 50/60 Hz conforming to UL 489 65 kA at 480/277 V AC 50/60 Hz conforming to UL 489 65 kA at 480 V AC 50/60 Hz conforming to UL 489 25 kA at 600Y/347 V AC 50/60 Hz conforming to UL 489 50 kA at 250 V DC conforming to UL 489
[Ue] rated operational voltage	690 V AC 50/60 Hz conforming to UL 489
Network frequency	50/60 Hz
[Ics] rated service breaking capacity	100 kA at 220...240 V AC 50/60 Hz conforming to IEC 60947-2 25 kA at 500...525 V AC 50/60 Hz conforming to IEC 60947-2 2.5 kA at 690 V AC 50/60 Hz conforming to IEC 60947-2 65 kA at 380...415 V AC 50/60 Hz conforming to IEC 60947-2 65 kA at 440 V AC 50/60 Hz conforming to IEC 60947-2
[Uimp] rated impulse withstand voltage	8 kV conforming to IEC 60947-2
Trip unit technology	Thermal-magneticTM-D,
Continuous current rating	80 %
[Ui] rated insulation voltage	800 V conforming to IEC 60947-2
Trip unit name	TM-D
Suitability for isolation	Yes conforming to IEC 60947-2
Utilisation category	Category A
Mechanical durability	15000 cycles conforming to IEC 947-1 Annex K ed 5.2
Electrical durability	10000 cycles conforming to IEC 947-1 Annex K ed 5.2 at 440 V In
Connection pitch	27 mm

Disclaimer: This documentation is not intended as a substitute for and is not to be used for determining suitability or reliability of these products for specific user applications

AWG gauge	AWG 14...AWG 8 aluminium/copper AWG 6...AWG 3/0 aluminium/copper
Local signalling	Presence of auxiliary contacts: flag (green)
Mounting mode	Clip-on (35 mm symmetrical DIN rail) By screws (plate)
Electrical connection	Terminal nut, ON and OFF end
Tightening torque	5 N.m for 2.5…16 mm² (AWG 14...AWG 4) 9 N.m for 25…95 mm² (AWG 3...AWG 3/0)
Number of slots	1 slot(s) for auxiliary switch OF (plug-in) 1 slot(s) for voltage release MN or MX (plug-in) 1 slot(s) for alarm switch SD (plug-in)
Power wire stripping length	20 mm
Color	Grey (RAL 7016)
9 mm pitches	9
Height	137 mm
Width	81 mm
Depth	80 mm
Product weight	0.924 kg
Quantity per set	Set of 1
Circuit breaker application	HACR rated

Environment

Quality labels	CE
Standards	EN/IEC 60947-2 NMX J-266 NEMA AB1 UL 489 GB 14048.2 CSA C22.2 No 5 EN/IEC 60947-5-1
Product certifications	UL IEC CCC EAC CSA NOM
IP degree of protection	Front cover: IP40 conforming to IEC 60529
IK degree of protection	IK07 conforming to IEC 62262
Pollution degree	3 conforming to IEC 60947-1
Ambient air temperature for operation	-25…70 °C
Ambient air temperature for storage	-50…85 °C
Operating altitude	2000 m without derating 5000 m with derating

Packing Units

Unit Type of Package 1	PCE
Number of Units in Package 1	1
Package 1 Height	8.8 cm
Package 1 Width	16.4 cm

Package 1 Length	25.9 cm
Package 1 Weight	1.311 kg

Environmental Data

Schneider Electric aims to achieve Net Zero status by 2050 through supply chain partnerships, lower impact materials, and circularity via our ongoing “Use Better, Use Longer, Use Again” campaign to extend product lifetimes and recyclability.

Environmental Data explained >

How we assess product sustainability >

Environmental footprint

Total lifecycle Carbon footprint	187
Environmental Disclosure	Product Environmental Profile

Use Better

Materials and Substances

Packaging made with recycled cardboard	Yes
Packaging without single use plastic	Yes
EU RoHS Directive	Compliant with Exemptions
REACh Regulation	REACh Declaration
California proposition 65	WARNING: This product can expose you to chemicals including: DINP, which is known to the State of California to cause cancer, and DIDP, which is known to the State of California to cause birth defects or other reproductive harm. For more information go to www.P65Warnings.ca.gov
Halogen-free status	Halogen free product
PVC free	Yes

Use Again

Repack and remanufacture

End of life manual availability	No need of specific recycling operations
Take-back	No
WEEE Label	The product must be disposed on European Union markets following specific waste collection and never end up in rubbish bins

Technical Illustration

Dimensions

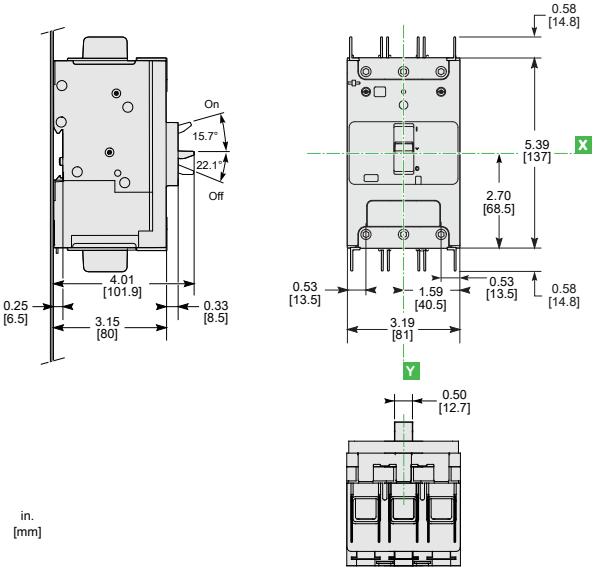

(F) TERMINATION OPTION - Terminal Nut (ON end) / Terminal Nut (OFF end)
ALL DIMENSIONS ARE APPROXIMATE.
ALSO REFER TO CAD, TECHNICAL DRAWINGS, AND DOCUMENTATION