

Ultrasonic sensor, transmitter

UBE15M-F54-H1-V1

- Large sensing range
- Large possible lateral distance between emitter and receiver
- Separate evaluation

Multi-head system

Dimensions

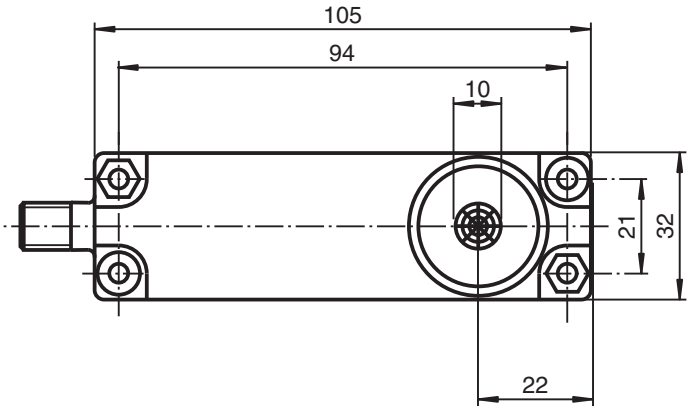

Bore hole and countersinking
for screws/hexagon M4

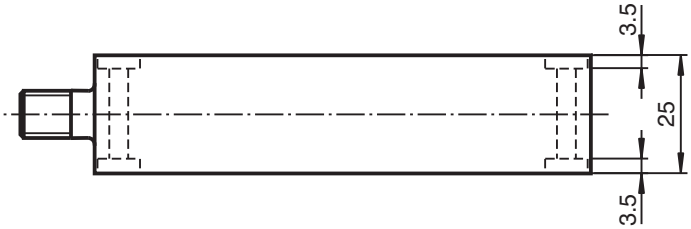

Technical Data

General specifications		
Sensing range		0 ... 15000 mm , emitter - receiver synchronised
Transducer frequency		approx. 40 kHz
Opening angle		± 45 ° at -6 dB
Temperature drift of echo propagation delay		0.2 %/K
Electrical specifications		
Operating voltage	U_B	16 ... 30 V DC , ripple 10 $\%_{SS}$ 8 V DC with reduced transmitting power
No-load supply current	I_0	≤ 10 mA (typ. 6 mA at U_B = 24 V DC)
Input		

Release date: 2025-05-16 Date of issue: 2025-05-16 Filename: 114519_eng.pdf

Technical Data

Input type	1 pulse input for transmitter pulse, activation through open collector npn < 1.5 V: emitter active, > 3.5 V: emitter inactive
Pulse length	100 µs ... 10 ms
Pause length	≥ 50 x pulse length
Compliance with standards and directives	
Standard conformity	
Standards	EN IEC 60947-5-2:2020 IEC 60947-5-2:2019
Approvals and certificates	
UL approval	cULus Listed, Class 2 Power Source
CCC approval	CCC approval / marking not required for products rated ≤36 V
Ambient conditions	
Ambient temperature	0 ... 50 °C (32 ... 122 °F)
Storage temperature	-40 ... 85 °C (-40 ... 185 °F)
Mechanical specifications	
Connection type	Connector plug M12 x 1 , 4-pin
Degree of protection	IP30
Material	
Housing	PBT
Mass	110 g
Dimensions	
Height	31 mm
Width	105 mm
Length	25 mm

Connection Assignment

Standard symbol/Connection:

Emitter

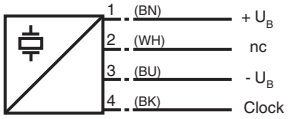

Core colours in accordance with EN 60947-5-2.

Connection Assignment

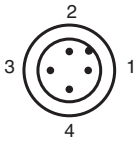

Release date: 2025-05-16 Date of issue: 2025-05-16 Filename: 114519_eng.pdf

Characteristic Curve

Direction characteristics

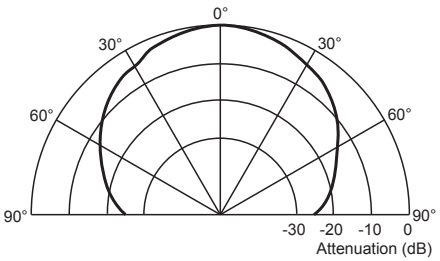

Characteristic response curve

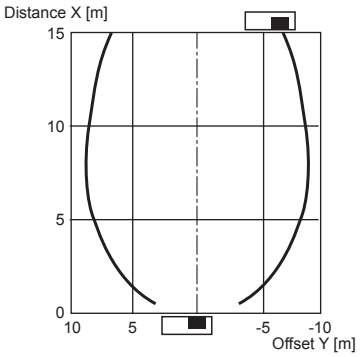

Permissible distance (offset) between the optical axis of the emitter and receiver.

Characteristic response curve

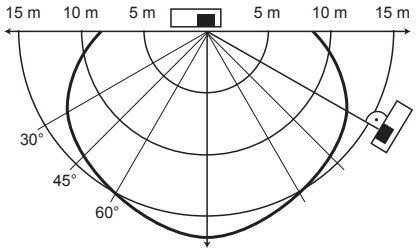

Release date: 2025-05-16 Date of issue: 2025-05-16 Filename: 114519_eng.pdf

Function

Function

The emitter is part of a complete system consisting of emitter, receiver and controller

Receiver: UBE15M-F54-H2-V1

Controller: UH3-16E4A-K15-R3

In real mode, the transmitter and receiver will not be not aligned to each other. This reduces the detection range that can be achieved.

The characteristic response curve to the side illustrates examples of the detection range of the system under the following operating conditions.

- The transmitter and receiver are arranged so they lie parallel opposite each other. The graph shows the detection range as a function of lateral offset.
- The receiver is arranged vertically downward, while the emitter is arranged in the direction of the receiver. The graph shows the detection range as a function of the angle of incidence.

This makes it possible to evaluate the detection range of the system as a function of the positioning of the transmitter and receiver for conditions that will occur in practical usage.



Cable sockets with built-in indicator LEDs must not be used to connect this device!

Release date: 2025-05-16 Date of issue: 2025-05-16 Filename: 114519_eng.pdf