MODEL: UJC-HP-G-5-SMT-TR | DESCRIPTION: USB RECEPTACLE

FEATURES

- USB Type C receptacle
- designed for power only applications
- reflow solder compatible
- tape & reel packaging



RoHS

SPECIFICATIONS

parameter	conditions/description	min	typ	max	units
rated input voltage				20	Vdc
rated input current	as per EIA-364-70, Method B power pins collectively (A9, A12, B9, B12) VCONN pins individually (A5, B5)			 3.0 1.25	 A A
contact resistance[1]	between terminals and mating plug			40	mΩ
insulation resistance	between adjacent contacts	100			MΩ
voltage withstand	between adjacent contacts	100			Vac
insertion force	at a rate of 12.5 mm/min	5		20	N
withdrawal force	at a rate of 12.5 mm/min	8		20	N
life	at a rate of 200 cycles per hour		5,000		cycles
operating temperature		-30		85	°C
flammability rating	UL94V-0				
RoHS	yes				

Note: 1. When measured at 20 mV / 100 mA.
2. All specifications measured at 10~35°C, humidity at 45~85%, under standard atmospheric pressure, unless otherwise noted.

SOLDERABILITY

parameter	conditions/description	min	typ	max	units
reel storage	at relative humidity 65~70%	25		30	°C
reflow soldering[3]	see reflow profile		255	260	°C

Note: 3. It is recommended to reflow solder within 3 months from opening vacuum packaging at a temperature of 25~30°C & relative humidity 65~70%.

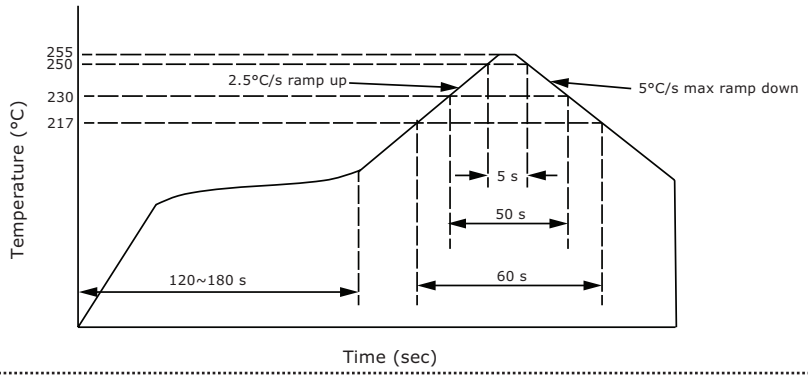

MECHANICAL DRAWING

units: mm
tolerance:
X. ±0.50 mm
X.X ±0.30 mm
X.XX ±0.20 mm
X.XXX ±0.10 mm
unless otherwise noted

	MATERIAL	PLATING
insulator	LCP (UL94V-0)	black
contact	copper alloy	contact area: gold flash solder area: matte tin over nickel
shell	stainless steel	nickel

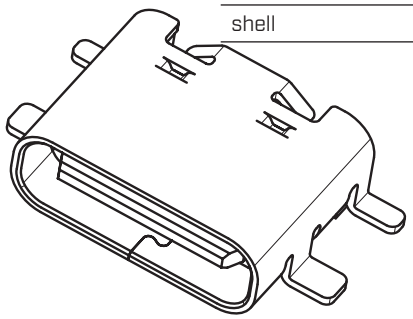

PIN CONNECTIONS			
PIN	SIGNAL NAME	PIN	SIGNAL NAME
A5	CC1	B5	CC2
A9	VBUS	B9	VBUS
A12	GND	B12	GND

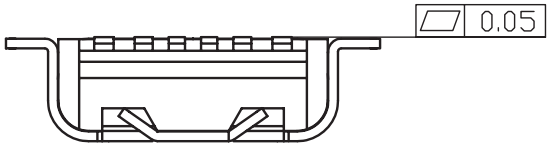

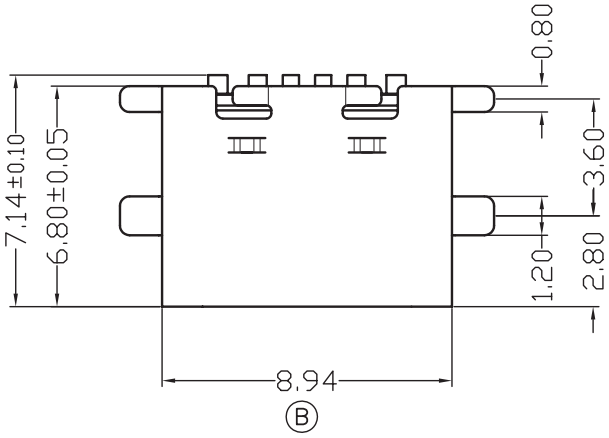

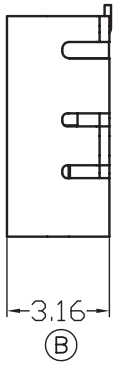

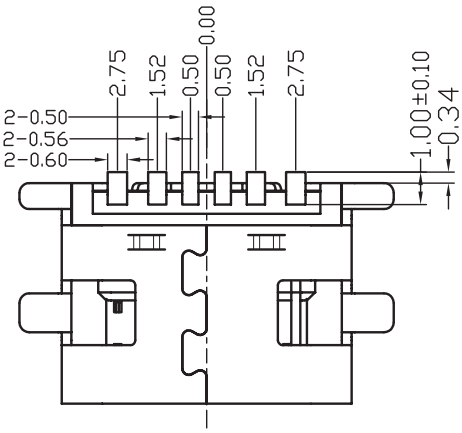

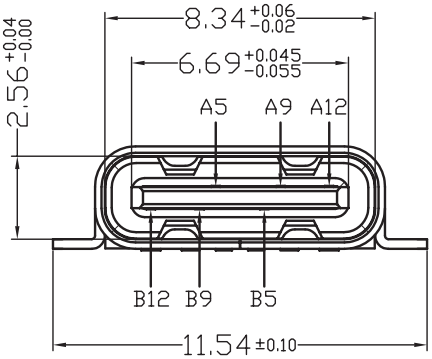

MECHANICAL DRAWING (CONTINUED)

units: mm
PCB tolerance: ±0.05 mm
PCB thickness: 0.8 mm

PIN CONNECTIONS			
PIN	SIGNAL NAME	PIN	SIGNAL NAME
A5	CC1	B5	CC2
A9	V_{BUS}	B9	V_{BUS}
A12	GND	B12	GND

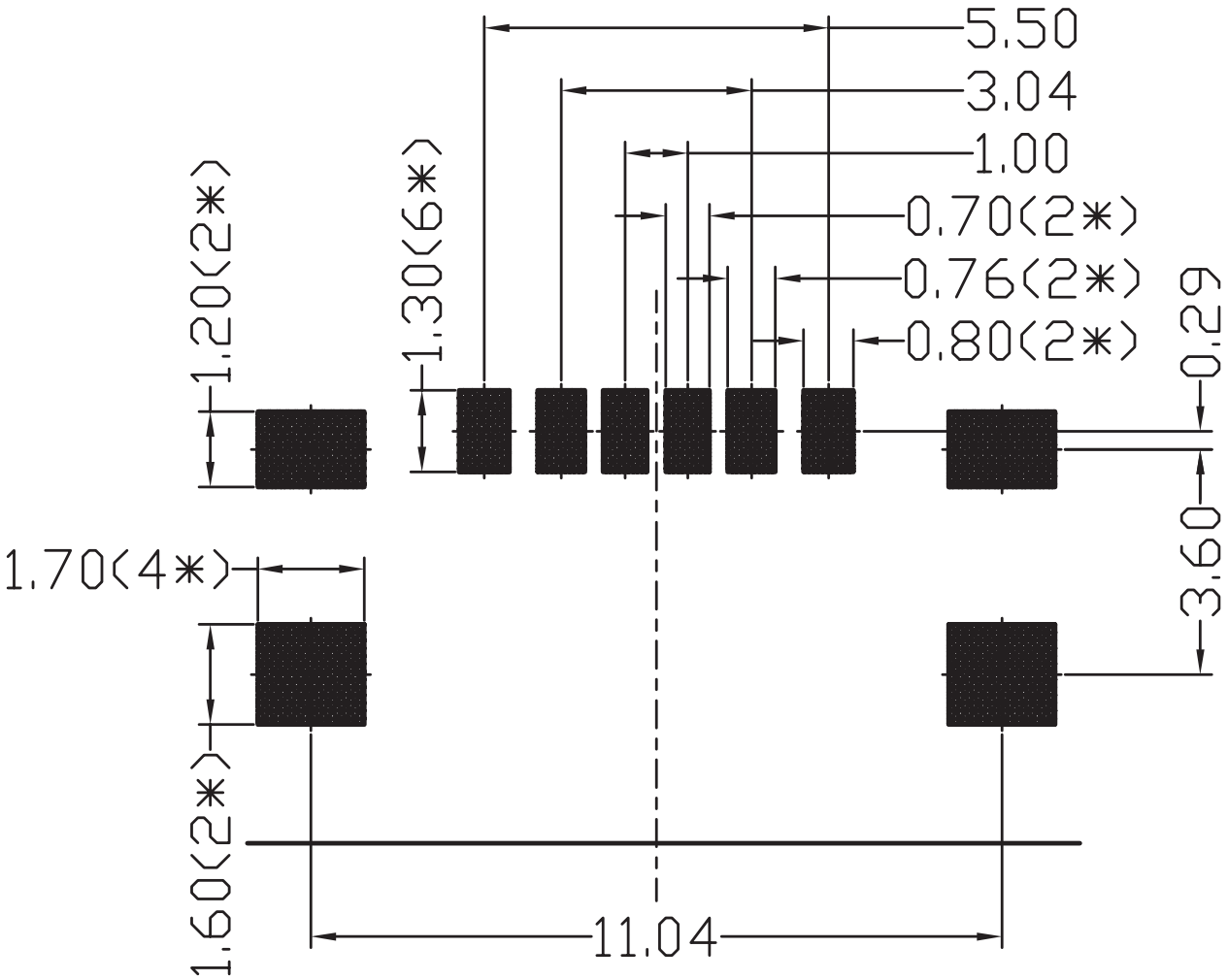

Recommended PCB Layout
Top View

PACKAGING

units: mm

Reel Size: Ø330 mm
Reel QTY: 1,000 pcs per reel
Carton Size: 355 x 355 x 235 mm
Carton QTY: 10,000 pcs

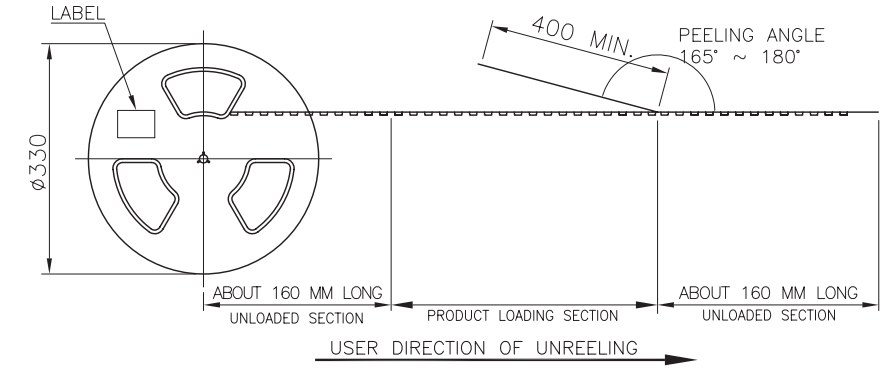

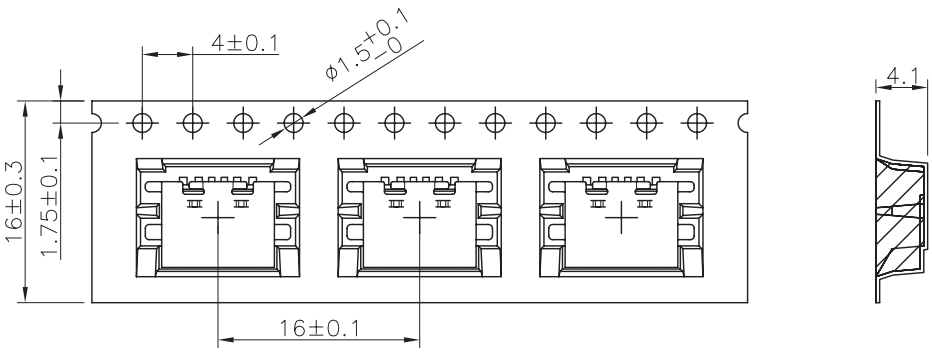

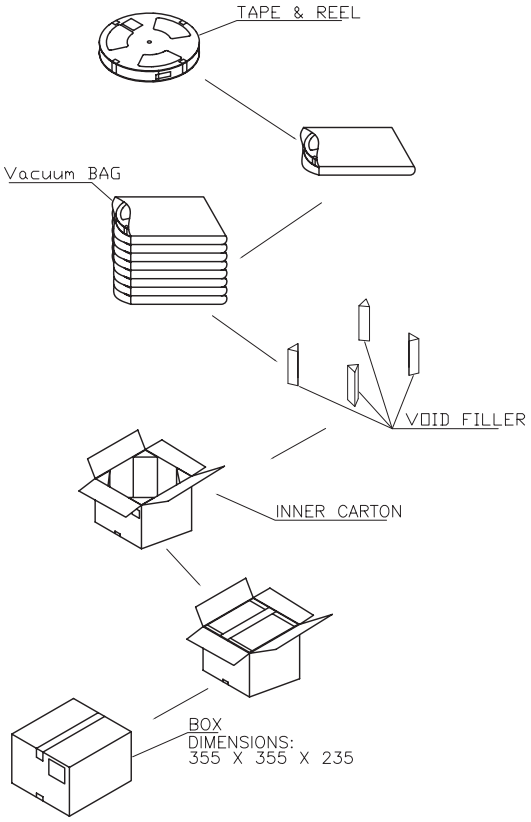

REVISION HISTORY

rev.	description	date
1.0	initial release	06/16/2022
1.01	logo, datasheet style update	10/11/2022
1.02	added dimensions to PCB layout	03/03/2023

The revision history provided is for informational purposes only and is believed to be accurate.

CUI Devices offers a one (1) year limited warranty. Complete warranty information is listed on our website.

CUI Devices reserves the right to make changes to the product at any time without notice. Information provided by CUI Devices is believed to be accurate and reliable. However, no responsibility is assumed by CUI Devices for its use, nor for any infringements of patents or other rights of third parties which may result from its use.

CUI Devices products are not authorized or warranted for use as critical components in equipment that requires an extremely high level of reliability. A critical component is any component of a life support device or system whose failure to perform can be reasonably expected to cause the failure of the life support device or system, or to affect its safety or effectiveness.

cuidevices.com