Rev	AWO #	Description	Date	Appr
-		RELEASED	5/25/21	
A		UPDATE TOLERANCES	7/26/21	WX/RC
B		UPDATE DRAWING	8/4/21	LH/RC

APPROVED: _____

DATE: _____ TITLE: _____

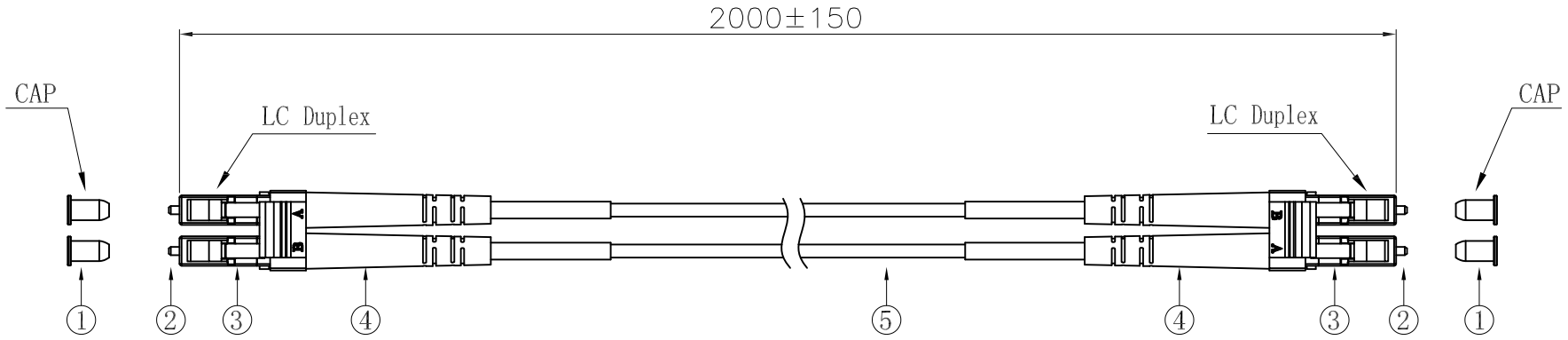

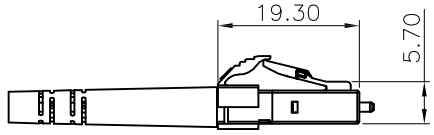

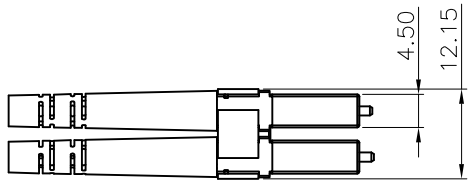

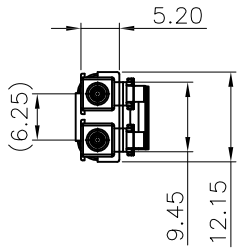

No.	Name	Material
5	Fiber optic cable	Fiberglass Shuck PVC Water blue
4	LC Tail Sleeve	PVC White
3	LC Outer Shell	Plastic Gray
2	Ceramic core	Ceramic White
1	CAP	PP White

SPECIFICATIONS:

Material:
Cable: Engineering plastics, Colo: Water Blue
Insert core: Zirconia ceramic
Electrical:
Standards of IEC,EIA/TIA, Telcordia
Return loss: 40dB min
Insertion loss: 0.3dB max
Temperature Rating:
Operating temperature: −25°C to +70°C
Environmental:
Lead free, RoHS compliant. RoHS COMPLIANT

UNLESS OTHERWISE SPECIFIED
ALL DIMENSIONS ARE MILLIMETERS
TOLERANCES: EXCEPT AS NOTED

MM	
1~10	± 0.50
11~30	± 1.00
31~50	± 2.00
51~200	± 5.00
200~	± 7.00

DRAWN	WX	5/25/21
CHECKED	JL	5/25/21
APPROVED		

THIS DRAWING CONTAINS INFORMATION THAT IS PROPRIETARY AND SHOULD NOT BE USED WITHOUT PRIOR WRITTEN PERMISSION FROM ADAM TECH

ADAM TECH
909 Rahway Avenue,
Union, NJ 07083
Phone: 908-687-5000
Fax: 908-687-5710

TITLE: CUSTOM ASSEMBLY, OPTICAL LC ADAPTOR, 2 PORTS , PLUG W/STRAIN RELIEF

SIZE	PART NO.	REV.
X	CA #OPLN2PNNC1NSR	B

REF: S00005C | SCALE: NTS | SHEET 1 OF 1