WR-42 Standard Gain Horn with 10 dBi gain, SMA Female connector, with Pre-Installed L Mount



PE2WAN042-10SF

Features

- 18 GHz to 26.5 GHz
- WR-42 Waveguide Band
- 10 dBi Nominal Gain
- SMA Female Connector
- Pre-Installed L Mount
- Integrates with Positioning Systems

Applications

- Antenna Measurements
- Wireless Communication
- Laboratory Use
- Microwave Radio Systems
- Radome Testing
- Automotive Antenna Test Solutions
- Radar Cross Section
- Satellite Antenna Testing

Description

The PE2WAN042-10SF standard gain horn antenna with pre-installed L mount (also known as waveguide horn) from Pasternack is part of our comprehensive selection of waveguide antennas. This standard gain horn is mated with a WR-42 to SMA female waveguide to coaxial adapter and operates from 18 GHz to 26.5 GHz.

Our PE2WAN042-10SF standard gain horn antenna with pre-installed L mount has a nominal gain of 10 dBi with a Horizontal and Vertical HPBW (Half Power Beam Width) of 52.1 dB and 51.6 dB respectively. Pasternack's SMA female to WR-42 standard gain horns are available in 10, 15 and 20 dBi models with pyramidal shape and connectorized input.

Waveguide antennas, such as the PE2WAN042-10SF are used in a wide variety of applications due to the high-power handling capability, low loss, high directivity, and near constant electrical performance. Our WR-42 waveguide antennas with SMA female interface is part of over 40,000 RF, microwave and millimeter wave components from Pasternack available worldwide and ship same day.

Configuration

Design	WR-42
Coaxial Interface	SMA Female

Electrical Specifications

Description	Minimum	Typical	Maximum	Units
Frequency Range	18		26.5	GHz
Gain		10		
Horizontal Half Power Beam Width		52.1		Degrees
Vertical Half Power Beam Width		51.6		
Waveguide to Coaxial Adapter				
VSWR			1.3:1	

Mechanical Specifications

Size

Length	6.364 in [161.65 mm]
Width	5.602 in [142.29 mm]
Height	4.032 in [102.41 mm]
Weight	0.6944 lbs [314.97 g]

© 2023 Infinite Electronics, Inc. Pasternack is a registered trademark of Infinite Electronics, Inc.

+1 (866) 558-2786 | sales@pasternack.com | **pasternack.com**

WR-42 Standard Gain Horn with 10 dBi gain, SMA Female connector, with Pre-Installed L Mount



PE2WAN042-10SF

RF Connector

Type	SMA Female

Waveguide Interface

Waveguide Size	WR-42

Compliance Certifications (see product page for current document)

Plotted and Other Data

Notes:

Typical Performance Data

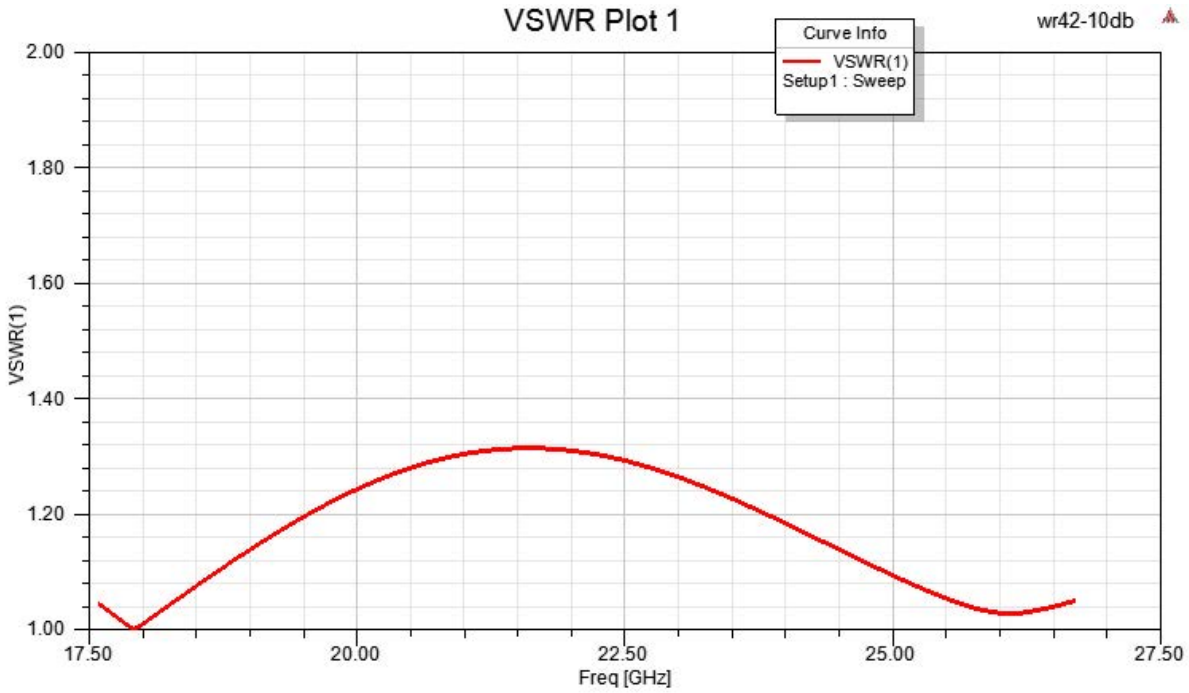

© 2023 Infinite Electronics, Inc. Pasternack is a registered trademark of Infinite Electronics, Inc.

WR-42 Standard Gain Horn with 10 dBi gain, SMA Female connector, with Pre-Installed L Mount



PE2WAN042-10SF

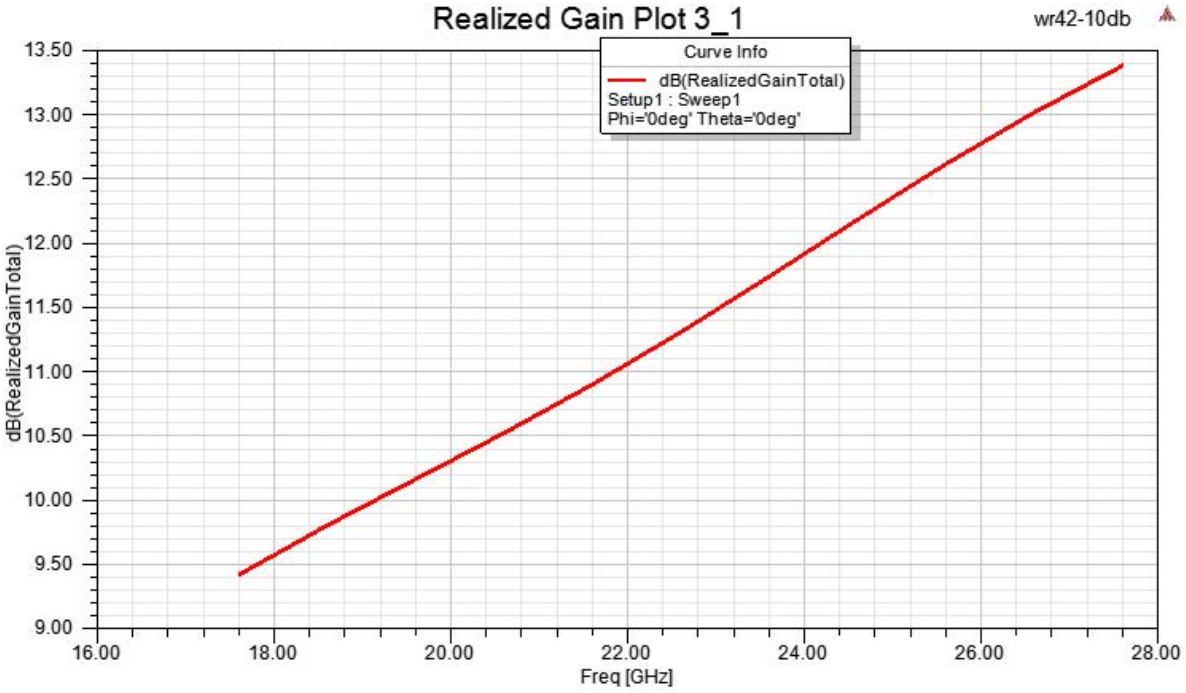

© 2023 Infinite Electronics, Inc. Pasternack is a registered trademark of Infinite Electronics, Inc.
+1 (866) 558-2786 | sales@pasternack.com | pasternack.com

WR-42 Standard Gain Horn with 10 dBi gain, SMA Female connector, with Pre-Installed L Mount



PE2WAN042-10SF

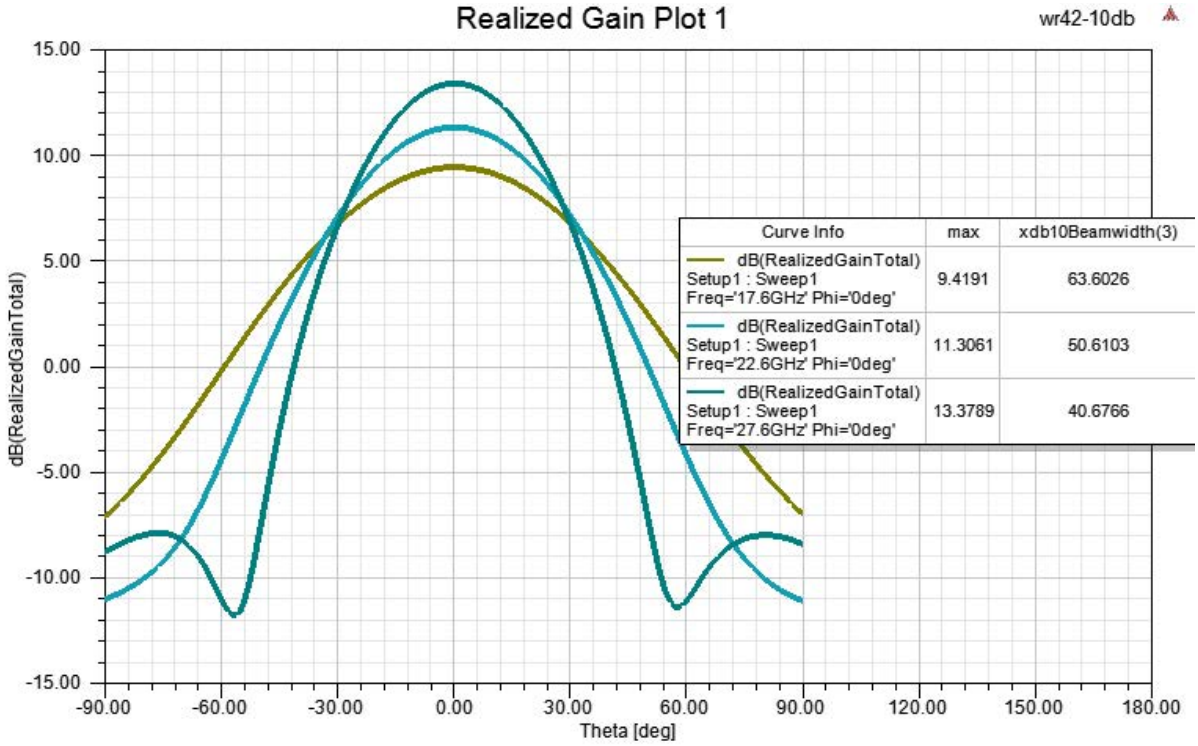

© 2023 Infinite Electronics, Inc. Pasternack is a registered trademark of Infinite Electronics, Inc.

WR-42 Standard Gain Horn with 10 dBi gain, SMA Female connector, with Pre-Installed L Mount



PE2WAN042-10SF

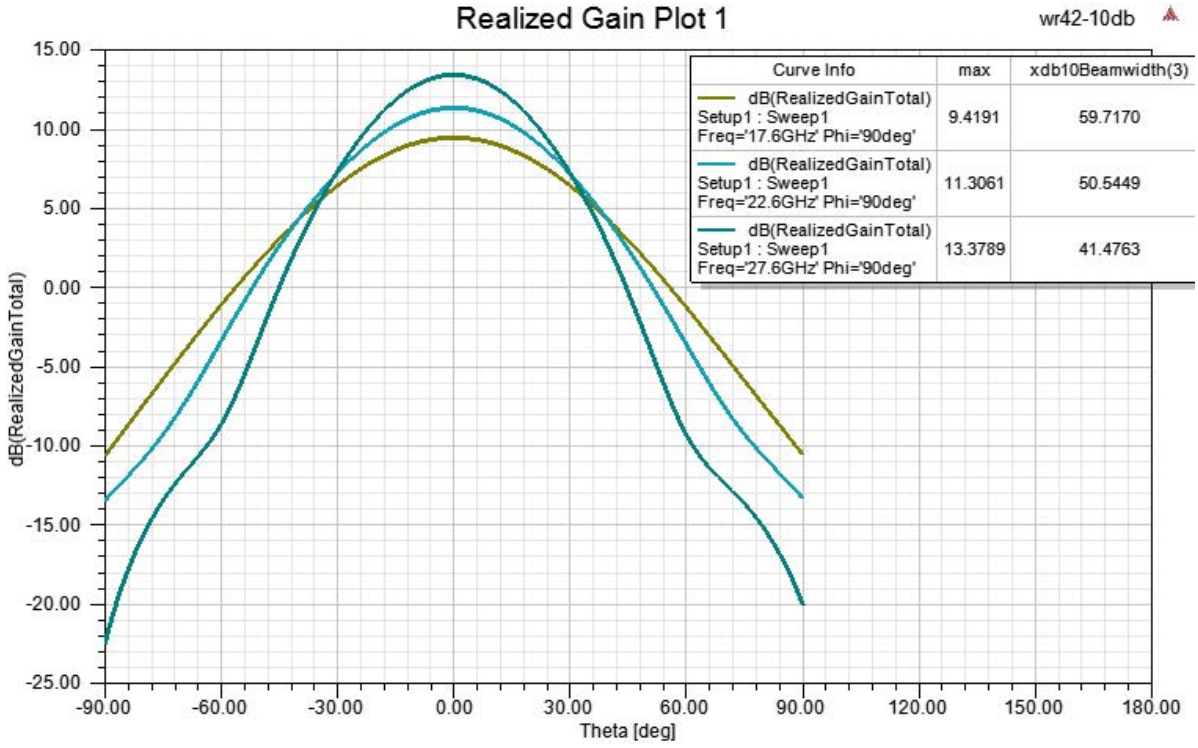

WR-42 Standard Gain Horn with 10 dBi gain, SMA Female connector, with Pre-Installed L Mount from Pasternack Enterprises has same day shipment for domestic and International orders. Our RF, microwave and millimeter wave products maintain a 99.4% availability and are part of the broadest selection in the industry.

Click the following link (or enter part number in "SEARCH" on website) to obtain additional part information including price, inventory and certifications: WR-42 Standard Gain Horn with 10 dBi gain, SMA Female connector, with Pre-Installed L Mount PE2WAN042-10SF

URL: https://www.pasternack.com/wr-42-waveguide-standard-gain-horn-antenna-10-dbi-sma-pe2wan042-10sf-p.aspx

The information contained within this document is accurate to the best of our knowledge and representative of the part described herein. It may be necessary to make modifications to the part and/or the documentation of the part in order to impliment improvements. Pasternack Enterprises reserves the right to make such changes as required. Unless otherwise stated, all specifications are nominal. Pasternack Enterprises does not make any representation or warranty regarding the suitability of the part described herein for any particular purpose, and Pasternack Enterprises does not assume liability arising out of the use of any part or document.

© 2023 Infinite Electronics, Inc. Pasternack is a registered trademark of Infinite Electronics, Inc.

PE2WAN042-10SF CAD Drawing

WR-42 Standard Gain Horn with 10 dBi gain, SMA Female connector, with Pre-Installed L Mount

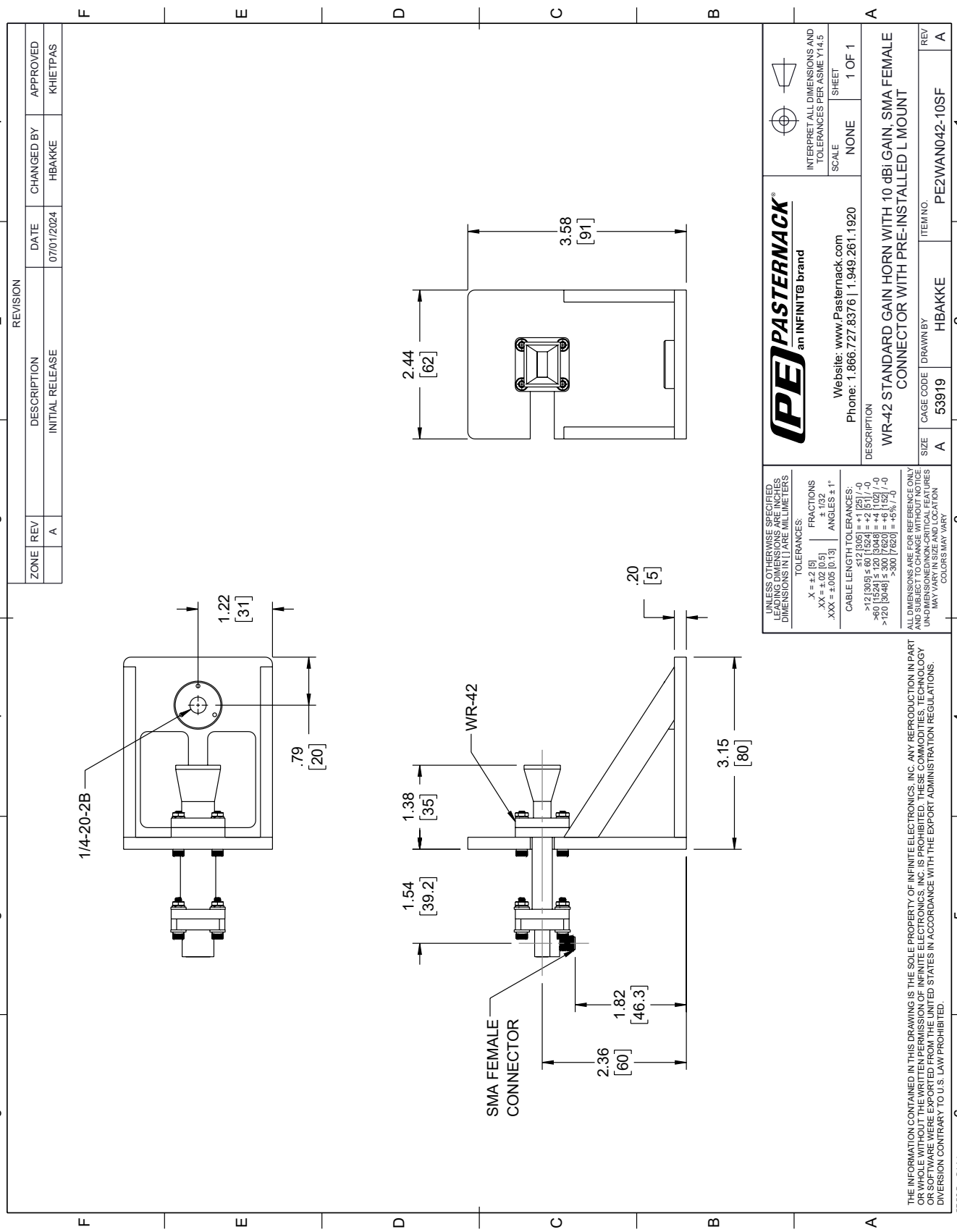

© 2023 Infinite Electronics, Inc. Pasternack is a registered trademark of Infinite Electronics, Inc.