32208526

M422, Sensor Elements with Wires

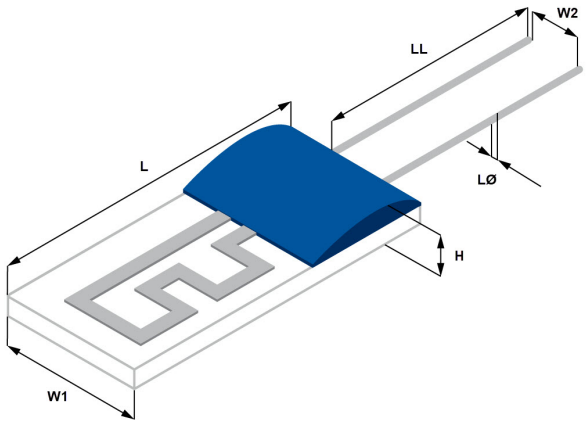

General Information	
Series	M422
Style	Wired
Temperature Coefficient	3850 ppm/K
RoHS	Yes
Lead Type	Pt clad Ni-wire
Connection Technology	Welding, Crimping, Brazing
Self Heating	0.3 K/mW at 0C
Storage Life	Min. 12 months (in original packaging).

Dimensions	
L	4mm +0.2/-0.1mm
W	2.1mm +/-0.2mm
W2	0.8mm +/-0.1mm
H	0.9mm +0.3/-0.2mm
LL	10mm +/-1mm
Minimum Fit Diameter (mm)	2.6 mm
Minimum Fit Diameter (Inch)	0.102"
Lo	0.2mm +/-0.02mm

Specifications	
Nominal Res. R_0 [Ω]	Pt1000 Ohms
Tolerance Class	F 0.3 (B)
Temperature Range	-70/+500°C
Tolerance Temperature Minimum	-70
Tolerance Temperature Maximum	500
Insulation Resistance	100 MOhms

Packaging Specifications	
Packaging	Blister Reel

The information provided in this data sheet describes certain technical characteristics of the product, but shall not be qualified or construed as quality guarantee (Beschaffenheitsgarantie) in the meaning of sections 443 and 444 German Civil Code. The information provided in this data sheet regarding measurement values (including, but not limited to, response time, long-term stability, vibration and shock resistance, insulation resistance and self-heating) are average values that have been obtained under laboratory conditions in tests of large numbers of the product. Product results or measurements achieved by customer or any other person in any production, test, or other environment may vary depending on the specific conditions of use. YAGEO Nexensos does not recommend the use of standard catalogue products or automotive grades for aerospace applications or manned space flight. The customer is solely responsible to determine whether the product is suited for the customer's intended use; in this respect YAGEO Nexensos cannot assume any liability. The sale of any products by YAGEO Nexensos is exclusively subject to the General Terms of Sale and Delivery of YAGEO Nexensos in their current version at the time of purchase, which is available under www.yageo-nexensos.com/tc or may be furnished upon request. This data sheet is subject to changes without prior notice.

© 2006 - 2025 YAGEO