Data sheet



DUV60E-D4KFHDFB

DUV60

MEASURING WHEEL ENCODERS

SICK
Sensor Intelligence.



Illustration may differ

Ordering information

Type	part no.
DUV60E-D4KFHDFB	1087569

Other models and accessories ➜ www.sick.com/DUV60

Detailed technical data

Safety-related parameters

$MTTF_D$ (mean time to dangerous failure)	275 years (EN ISO 13849-1) [1]

[1] This product is a standard product and does not constitute a safety component as defined in the Machinery Directive. Calculation based on nominal load of components, average ambient temperature 40 °C, frequency of use 8760 h/a. All electronic failures are considered hazardous. For more information, see document no. 8015532.

Performance

Pulses per revolution	1 ... 60 [1]
Resolution in pulses/mm	0.125 mm/pulse to 304.8 mm/pulse (type-dependent)
Measuring step	90° electric/pulses per revolution
Measuring step deviation	± 18°, / pulses per revolution
Error limits	Measuring step deviation x 3
Duty cycle	0.5 ± 5 %
Initialization time	< 5 ms [2]

[1] Available pulses per revolution see type code.
[2] Valid positional data can be read once this time has elapsed.

Interfaces

Communication interface	Incremental
Communication Interface detail	TTL / HTL
Parameterising data	DIP switch, selectable output

Electrical data

Operating power consumption (no load)	120 mA
Connection type	Male connector, M12, 4-pin, universal [1]
Pulses per revolution	✓

[1] The universal connection is rotatable so that it is possible to position the conector in the radial or axial direction.

Output voltage	✓
Direction of rotation	✓
Power consumption max. without load	≤ 1.25 W
Supply voltage	4.75 V ... 30 V
Load current max.	≤ 30 mA, per channel
Maximum output frequency	60 kHz
Reference signal, number	1
Reference signal, position	180°, electric, gated with A
Reverse polarity protection	✓
Short-circuit protection of the outputs	✓

[1] The universal connection is rotatable so that it is possible to position the conector in the radial or axial direction.

Mechanical data

Measuring wheel circumference	12 ″
Measuring wheel surface	Smooth plastic (urethane) [1]
Spring arm design	Spring tension, under-belt flange mount
Mass	0.9 kg [2]
Encoder material	
Shaft	Stainless steel
Flange	Aluminum
Housing	Aluminum
Cable	PVC
Spring arm mechanism material	
Spring element	Spring steel
Measuring wheel, spring arm	Aluminum
Yoke	Aluminum
Counterweight	Aluminum
Start up torque	0.5 Ncm
Operating torque	0.4 Ncm
Operating speed	1,500 min^{-1}
Bearing lifetime	3.6 x 10^9 revolutions
Maximum travel/deflection of spring arm	40 mm [3]
Recommended pretension	20 mm [3]
Max. permissible working area for the spring (continuous operation)	± 10 mm

[1] The surface of a measuring wheel is subject to wear. This depends on contact pressure, acceleration behavior in the application, traversing speed, measurement surface, mechanical alignment of the measuring wheel, temperature, and ambient conditions. We recommend you regularly check the condition of the measuring wheel and replace as required.

[2] Based on an encoder with a plug connector output and urethane rollers, no mounting necessary (arm mount).

[3] Only applies to variants with spring arm mounting.

Ambient data

EMC	According to EN 61000-6-2 and EN 61000-6-3

[1] When the mating connector is installed and the DIP switch door is sealed with the encoder housing.

Enclosure rating	IP65 [1]
Permissible relative humidity	90 % (Condensation not permitted)
Operating temperature range	–30 °C ... +70 °C
Storage temperature range	–40 °C ... +75 °C

[1] When the mating connector is installed and the DIP switch door is sealed with the encoder housing.

Certificates

EU declaration of conformity	✓
UK declaration of conformity	✓
ACMA declaration of conformity	✓
China-RoHS	✓
cULus certificate	✓

Classifications

ECLASS 5.0	27270501
ECLASS 5.1.4	27270501
ECLASS 6.0	27270590
ECLASS 6.2	27270590
ECLASS 7.0	27270501
ECLASS 8.0	27270501
ECLASS 8.1	27270501
ECLASS 9.0	27270501
ECLASS 10.0	27270790
ECLASS 11.0	27270707
ECLASS 12.0	27270504
ETIM 5.0	EC001486
ETIM 6.0	EC001486
ETIM 7.0	EC001486
ETIM 8.0	EC001486
UNSPSC 16.0901	41112113

Dimensional drawing

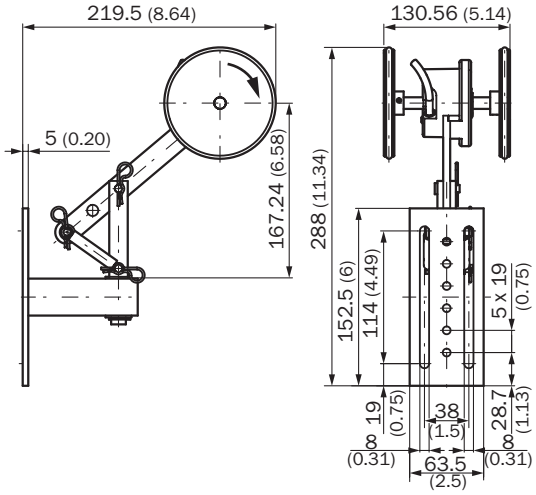

Dimensions in mm (inch)

PIN assignment

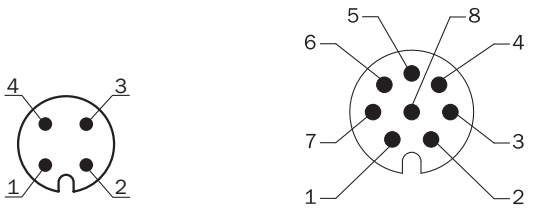

Wire colors (cable connection)	Male connector M12, 4-pin	Male connector M12, 8-pin	Output function				Explanation
			A	B	C	D	
Brown	-	1	A-	CW-	A-	A-	Signal
White	4	2	A	CW	A	A	Signal
Black	-	3	B-	CCW-	Direction-	B-	Signal
Pink	2	4	B	CCW	Direction	Fault (M12, 4-pin)B (M12, 8-pin and cable connection)	Signal
Yellow	-	5	Z-	Fault-	Fault-	Fault-	Signal
Violet	-	6	Z	Fault	Fault	Fault	Signal
Blue	3	7	GND	GND	GND	GND	Ground connection
Red	1	8	U_S	U_S	U_S	U_S	Supply voltage
-	-	-	Case	Case	Case	Case	Earth fault protection
Shielding	-	-	Shielding	Shielding	Shielding	Shielding	Shielding

Adjustments Status indicator LED

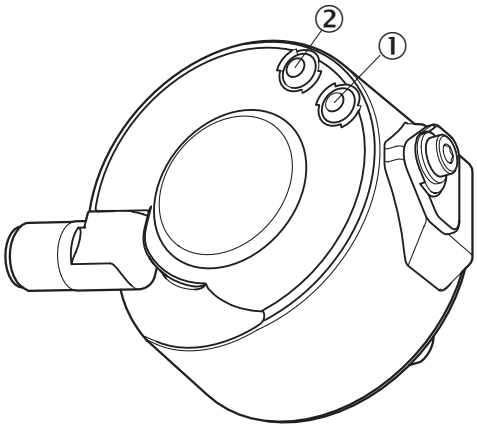

① Signal
② Fault/Power

Recommended accessories

Other models and accessories ➜ www.sick.com/DUV60

	Brief description	Type	part no.
connectors and cables			
	• **Connection type head A:** Flying leads • **Connection type head B:** Flying leads • **Signal type:** CANopen, DeviceNet™ • **Items supplied:** By the meter • **Cable:** 4-wire, twisted pair • **Description:** CANopen, shieldedDeviceNet™ • **Note:** Wire shield Al-Pt film, overall shield C-screen tin-plated	LTG-2804-MW	6028328
	• **Connection type head A:** Female connector, M12, 4-pin, straight, A-coded • **Connection type head B:** Flying leads • **Signal type:** Sensor/actuator cable • **Cable:** 20 m, 4-wire, PUR, halogen-free • **Description:** Sensor/actuator cable, shielded • **Connection systems:** Flying leads	DOL-1204-G20MAC	2088080
	• **Connection type head A:** Female connector, M12, 4-pin, straight • **Connection type head B:** Flying leads • **Cable:** 10 m, 4-wire, PUR, halogen-free • **Description:** Welding spark resistant, shielded • **Connection systems:** Flying leads • **Application:** Zones with oils and lubricants, Drag chain operation	DOL-1204-G10MAC	6041797
	• **Connection type head A:** Female connector, M12, 4-pin, straight • **Connection type head B:** Flying leads • **Cable:** 5 m, 4-wire, PUR, halogen-free • **Description:** Shielded • **Connection systems:** Flying leads • **Application:** Zones with oils and lubricants, Drag chain operation	DOL-1204-G05MAC	6038621
	• **Connection type head A:** Female connector, M12, 4-pin, straight, A-coded • **Connection type head B:** Flying leads • **Cable:** 2 m, 4-wire, PUR, halogen-free • **Description:** Shielded • **Connection systems:** Flying leads • **Application:** Zones with oils and lubricants, Drag chain operation	DOL-1204-G02MAC	2088079
	• **Connection type head A:** Female connector, M12, 5-pin, straight, A-coded • **Signal type:** CANopen, DeviceNet™ • **Description:** CANopen, shieldedDeviceNet™ • **Connection systems:** Screw-type terminals • **Permitted cross-section:** ≤ 0.75 mm²	DOS-1205-GA	6027534

SICK AT A GLANCE

SICK is one of the leading manufacturers of intelligent sensors and sensor solutions for industrial applications. A unique range of products and services creates the perfect basis for controlling processes securely and efficiently, protecting individuals from accidents and preventing damage to the environment.

We have extensive experience in a wide range of industries and understand their processes and requirements. With intelligent sensors, we can deliver exactly what our customers need. In application centers in Europe, Asia and North America, system solutions are tested and optimized in accordance with customer specifications. All this makes us a reliable supplier and development partner.

Comprehensive services complete our offering: SICK LifeTime Services provide support throughout the machine life cycle and ensure safety and productivity.

For us, that is “Sensor Intelligence.”

WORLDWIDE PRESENCE:

Contacts and other locations –www.sick.com