ORDER NO.	WOODHEAD NO.	COLOR
130141-0068	2948	YELLOW

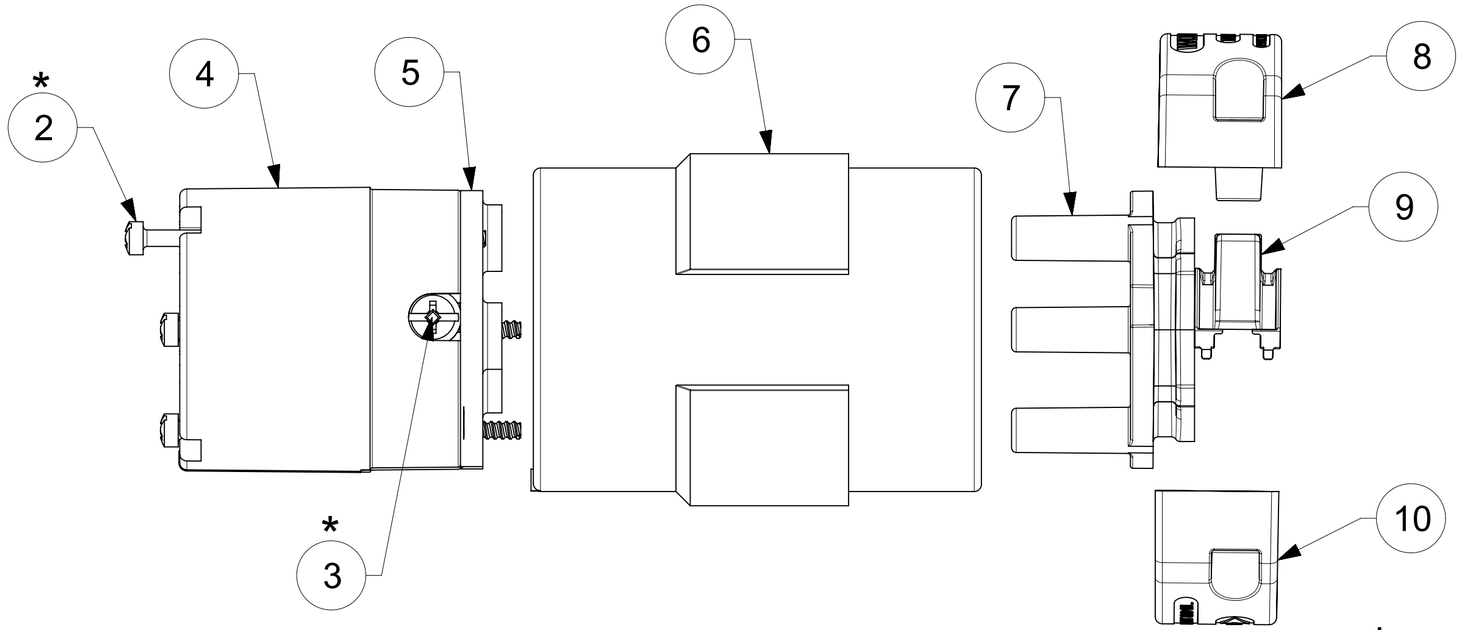

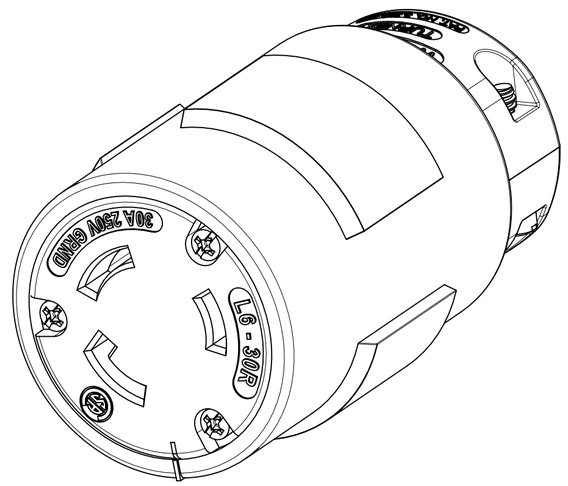

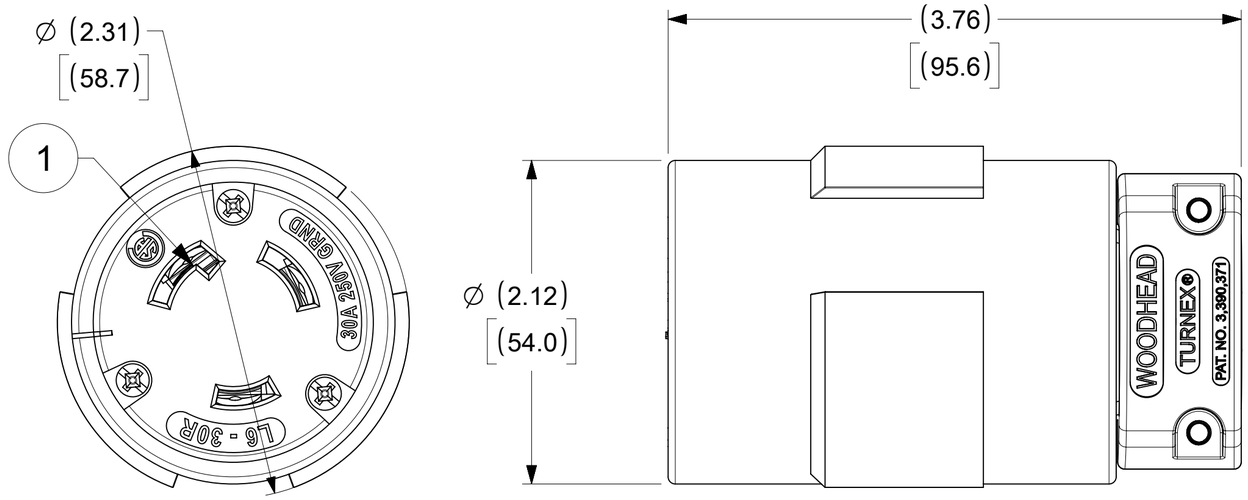

* FOR SCREW TORQUE, SEE ASSEMBLY INSTRUCTIONS

ITEM NO.	DESCRIPTIONS	MATERIAL	QTY.
1	CLIP ASSEMBLY	BRASS	3
2	RETAINING SCREWS	STAINLESS STEEL	3
3	TERMINAL SCREWS/CLAMP ASSEMBLY	BRASS, ZINC PLATED	3
4	INSERT	NYLON	1
5	TERMINAL COVER	POLYCARBONATE	1
6	CONNECTOR HOUSING	RUBBER	1
7	CLAMP SUPPORT	NYLON	1
8	CLAMP CORD MALE	NYLON	1
9	CLAMP CORD INSERT	NYLON	1
10	CLAMP CORD FEMALE	NYLON	1
11	RETAINING SCREWS	STEEL	2

DOCUMENT STATUS	P1	RELEASE DATE	2021/07/02 21:17:16

WIRING TERMINATION

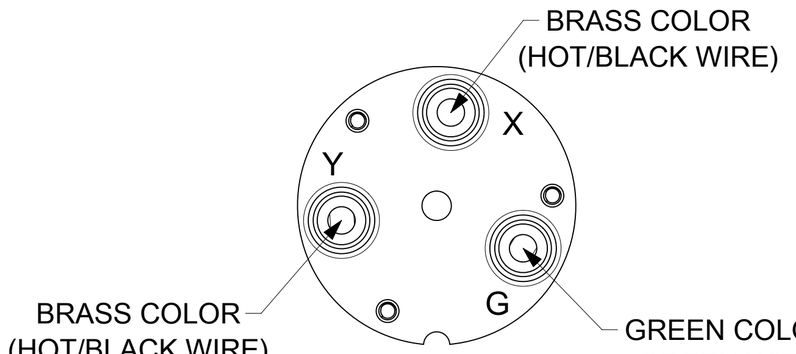

THIS DRAWING CONTAINS INFORMATION THAT IS PROPRIETARY TO MOLEX ELECTRONIC TECHNOLOGIES, LLC AND SHOULD NOT BE USED WITHOUT WRITTEN PERMISSION

FUNCTIONAL SYMBOLS
FA = 0
FC = 0
FP = 0
DIVISIONAL SYMBOLS

DIMENSION UNITS: INCH/MM
SCALE: NTS

GENERAL TOLERANCES (UNLESS SPECIFIED)

	MM	INCH
4 PLACES	±	±
3 PLACES	±	± 0.005
2 PLACES	±	± 0.01
1 PLACE	±	±
0 PLACES	±	±
ANGULAR TOL	± 0.5 °	

DRAFT WHERE APPLICABLE MUST REMAIN WITHIN DIMENSIONS

CURRENT REV DESC: NEW RELEASE

EC NO: 666732
DRWN: VHANDI 2019/06/21
CHK'D: DNGUYEN62 2021/07/01
APPR: HKNEELAND 2021/07/02

INITIAL REVISION:
DRWN: VHANDI 2019/06/21
APPR: HKNEELAND 2021/07/02

THIRD ANGLE PROJECTION | DRAWING: C-SIZE | SERIES: 130141

molex

SUPER-SAFEWAY CONN NEMA L6-30 30A/250V

PRODUCT CUSTOMER DRAWING

DOCUMENT NUMBER	DOC TYPE	DOC PART	REVISION
1301410068	PSD	000	A

MATERIAL NUMBER	CUSTOMER	SHEET NUMBER
SEE TABLE	GENERAL MARKET	1 OF 1

FORMAT: Eng-lega-master-tb-prod-C
REVISION: E
DATE: 2020/01/14