Data sheet

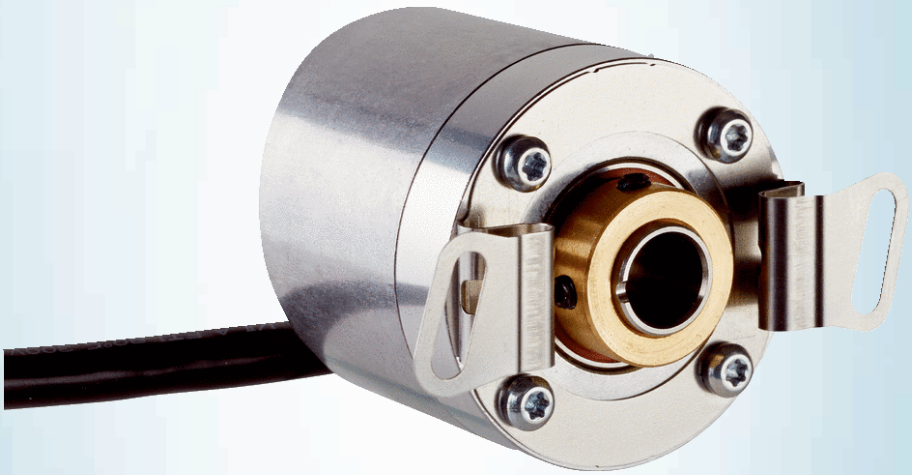

# DBS36E-BBGP01000

## DBS36/50

INCREMENTAL ENCODERS

SICK
Sensor Intelligence.

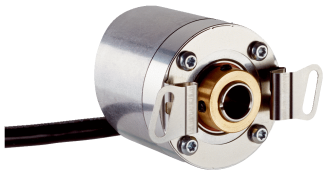

Illustration may differ

## Ordering information

| Type | part no. |
|---|---|
| DBS36E-BBGP01000 | 1087591 |

Other models and accessories ➜ www.sick.com/DBS36_50

## Detailed technical data

### Safety-related parameters

| | |
|---|---|
| **$MTTF_D$ (mean time to dangerous failure)** | 600 years (EN ISO 13849-1) [1] |

[1] This product is a standard product and does not constitute a safety component as defined in the Machinery Directive. Calculation based on nominal load of components, average ambient temperature 40 °C, frequency of use 8760 h/a. All electronic failures are considered hazardous. For more information, see document no. 8015532.

### Performance

| | |
|---|---|
| **Pulses per revolution** | 1,000 |
| **Measuring step** | 90°, electric/pulses per revolution |
| **Measuring step deviation** | ± 18° / pulses per revolution |
| **Error limits** | ± 54° / pulses per revolution |
| **Duty cycle** | ≤ 0.5 ± 5 % |

### Interfaces

| | |
|---|---|
| **Communication interface** | Incremental |
| **Communication Interface detail** | HTL / Push pull |
| **Number of signal channels** | 3 channel |
| **Initialization time** | < 3 ms |
| **Output frequency** | ≤ 300 kHz |
| **Load current** | ≤ 30 mA |
| **Power consumption** | ≤ 0.5 W (without load) |

### Electronics

| | |
|---|---|
| **Connection type** | Cable, 8-wire, with male connector, M12, 8-pin, universal, 0.5 m |
| **Supply voltage** | 7 ... 27 V |
| **Reference signal, number** | 1 |
| **Reference signal, position** | 90°, electric, logically gated with A and B |
| **Reverse polarity protection** | ✓ |

## Mechanics

| | |
|---|---|
| **Mechanical design** | Blind hollow shaft |
| **Shaft diameter** | 8 mmFront clamp [1] |
| **Weight** | + 150 g (with connecting cable) |
| **Shaft material** | Stainless steel |
| **Flange material** | Aluminum |
| **Housing material** | Aluminum |
| **Material, cable** | PVC |
| **Start up torque** | + 0.5 Ncm (+20 °C) |
| **Operating torque** | 0.4 Ncm (+20 °C) |
| **Permissible movement static** | ± 0.3 mm (radial)<br>± 0.5 mm (axial) [2] |
| **Permissible movement dynamic** | ± 0.1 mm (radial)<br>± 0.2 mm (axial) [2] |
| **Operating speed** | 6,000 $min^{-1}$ [3] |
| **Maximum operating speed** | ≤ 8,000 $min^{-1}$ [4] |
| **Moment of inertia of the rotor** | 0.8 $gcm^2$ |
| **Bearing lifetime** | 2 x 10^9 revolutions |
| **Angular acceleration** | ≤ 500,000 $rad/s^2$ |

[1] Order collets for 5 mm, 6 mm and 1/4" mm separately as accessories.
[2] Higher values are possible using limited bearing life.
[3] Allow for self-heating of 4.7 K per 1,000 rpm when designing the operating temperature range.
[4] No permanent operation. Decreasing signal quality.

## Ambient data

| | |
|---|---|
| **EMC** | According to EN 61000-6-2 and EN 61000-6-3 (class A) |
| **Enclosure rating** | IP65 |
| **Permissible relative humidity** | 90 % (Condensation not permitted) |
| **Operating temperature range** | –20 °C ... +70 °C |
| **Storage temperature range** | –40 °C ... +100 °C, without package |
| **Resistance to shocks** | 100 g, 6 ms (EN 60068-2-27) |
| **Resistance to vibration** | 20 g, 10 Hz ... 2,000 Hz (EN 60068-2-6) |

## Classifications

| | |
|---|---|
| **ECLASS 5.0** | 27270501 |
| **ECLASS 5.1.4** | 27270501 |
| **ECLASS 6.0** | 27270590 |
| **ECLASS 6.2** | 27270590 |
| **ECLASS 7.0** | 27270501 |
| **ECLASS 8.0** | 27270501 |
| **ECLASS 8.1** | 27270501 |
| **ECLASS 9.0** | 27270501 |
| **ECLASS 10.0** | 27270501 |
| **ECLASS 11.0** | 27270501 |

| | |
|---|---|
| **ECLASS 12.0** | 27270501 |
| **ETIM 5.0** | EC001486 |
| **ETIM 6.0** | EC001486 |
| **ETIM 7.0** | EC001486 |
| **ETIM 8.0** | EC001486 |
| **UNSPSC 16.0901** | 41112113 |

## Certificates

| | |
|---|---|
| **EU declaration of conformity** | ✓ |
| **UK declaration of conformity** | ✓ |
| **ACMA declaration of conformity** | ✓ |
| **China-RoHS** | ✓ |
| **cRUus certificate** | ✓ |

## Dimensional drawing Blind hollow shaft, cable

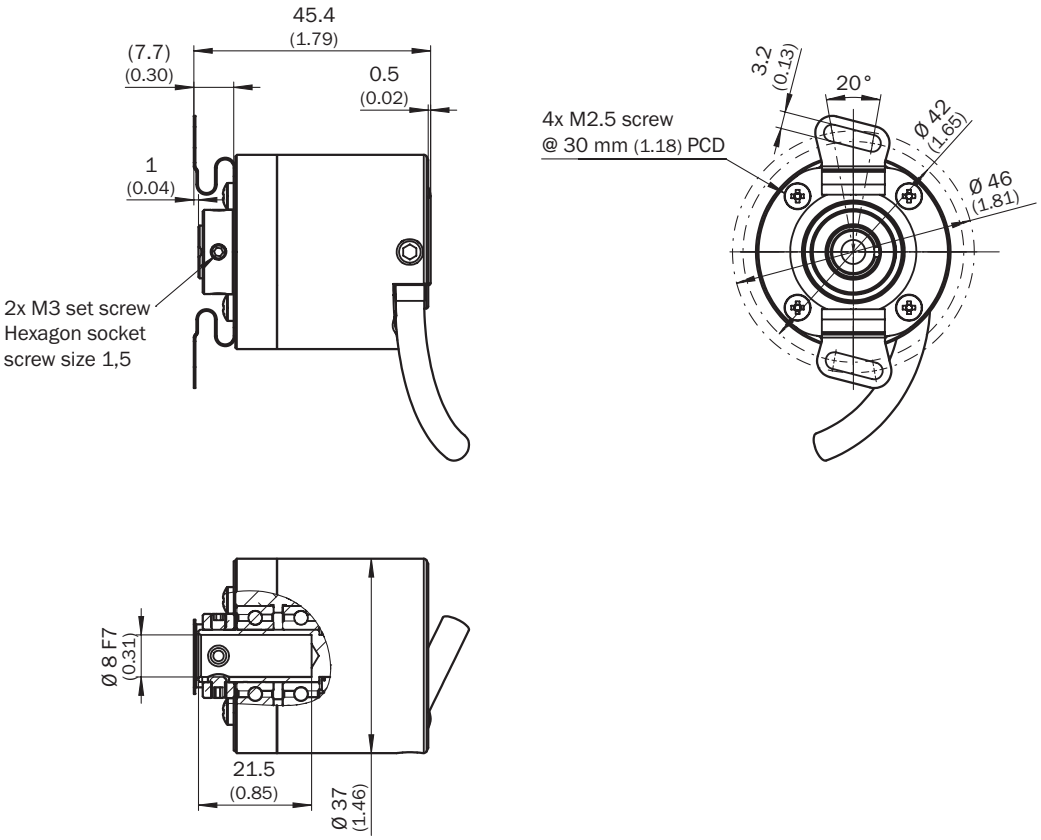


Dimensions in mm (inch)

## Attachment specifications

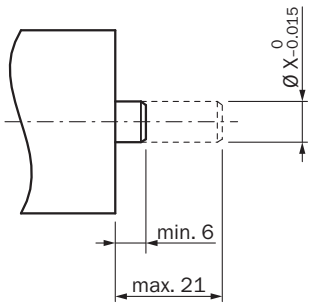


| | Encoder | |
|---|---|---|
| 6 mm | DBS36E-BA | 2056390Premounted |
| 5 mm | DBS36E-BB | 2066991 |
| 6 mm | | 2056390 |
| 1/4″ | | On request |
| 8 mm | | Not required |

## PIN assignment

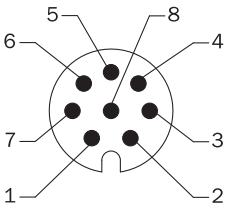


| Wire colors (cable connection) | Male connector M12, 8-pin | Male connector M23, 12-pin | TTL/HTL 6-channel signal | Explanation |
|---|---|---|---|---|
| Brown | 1 | 6 | A- | Signal wire |
| White | 2 | 5 | A | Signal wire |
| Black | 3 | 1 | B- | Signal wire |
| Pink | 4 | 8 | B | Signal wire |
| Yellow | 5 | 4 | Z- | Signal wire |
| Purple | 6 | 3 | Z | Signal wire |
| Blue | 7 | 10 | GND | Ground connection |
| Red | 8 | 12 | $+U_s$ | Supply voltage |
| - | - | 9 | Not assigned | Not assigned |
| - | - | 2 | Not assigned | Not assigned |
| - | - | 11 | Not assigned | Not assigned |
| - | - | 7 | Not assigned | Not assigned |

## Diagrams Signal outputs for electrical interfaces TTL and HTL

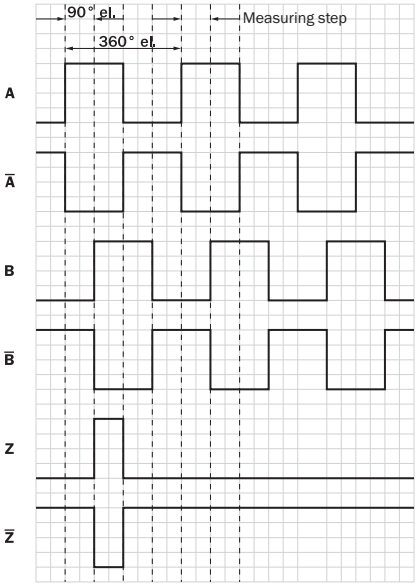


Cw with view on the encoder shaft in direction "A", compare dimensional drawing.
① Interfaces G, P, R only for channels A, B, Z.

| Supply voltage | Output |
|---|---|
| 4.5 V...5.5 V | TTL/RS422 |
| 7 V...30 V | TTL/RS422 |
| 7 V...30 V | HTL/Push Pull |
| 7 V...27 V | HTL/push pull, 3 channel |
| 4.5 V...5.5 V | Open Collector NPN, 3 channel |
| 4.5 V...30 V | Open Collector NPN, 3 channel |

## Operation note Zero pulse explanation

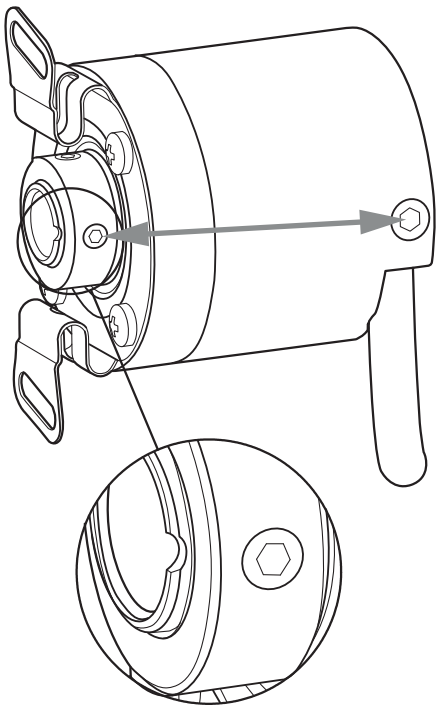

## Recommended accessories

Other models and accessories ➜ www.sick.com/DBS36_50

| | Brief description | Type | part no. |
|---|---|---|---|
| connectors and cables | | | |
|  | • **Connection type head A:** Flying leads<br>• **Connection type head B:** Flying leads<br>• **Signal type:** SSI, Incremental, HIPERFACE®<br>• **Items supplied:** By the meter<br>• **Cable:** 8-wire, PUR, halogen-free<br>• **Description:** SSI, shielded, Incremental, HIPERFACE® | LTG-2308-MWENC | 6027529 |
|  | • **Connection type head A:** Flying leads<br>• **Connection type head B:** Flying leads<br>• **Signal type:** SSI, Incremental<br>• **Items supplied:** By the meter<br>• **Cable:** 11-wire, PUR<br>• **Description:** SSI, shielded, Incremental | LTG-2411-MW | 6027530 |
|  | • **Connection type head A:** Flying leads<br>• **Connection type head B:** Flying leads<br>• **Signal type:** SSI, Incremental<br>• **Items supplied:** By the meter<br>• **Cable:** 12-wire, PUR, halogen-free<br>• **Description:** SSI, shielded, Incremental | LTG-2512-MW | 6027531 |
|  | • **Connection type head A:** Flying leads<br>• **Connection type head B:** Flying leads<br>• **Signal type:** SSI, TTL, HTL, Incremental<br>• **Items supplied:** By the meter<br>• **Cable:** 12-wire, UV and saltwater-resistant, PUR, halogen-free<br>• **Description:** SSI, shielded, TTL, HTL, Incremental | LTG-2612-MW | 6028516 |
|  | • **Connection type head A:** Female connector, M12, 8-pin, straight, A-coded<br>• **Signal type:** Incremental, SSI<br>• **Cable:** CAT5, CAT5e<br>• **Description:** Incremental, shieldedSSI<br>• **Connection systems:** IDC quick connection<br>• **Permitted cross-section:** 0.14 mm² ... 0.34 mm² | DOS-1208-GA01 | 6045001 |
|  | • **Connection type head A:** Female connector, M12, 8-pin, straight<br>• **Connection type head B:** Flying leads<br>• **Signal type:** Incremental, SSI<br>• **Cable:** 2 m, 8-wire, PUR, halogen-free<br>• **Description:** Incremental, shieldedSSI<br>• **Connection systems:** Flying leads | DOL-1208-G02MAC1 | 6032866 |
|  | • **Connection type head A:** Female connector, M12, 8-pin, straight<br>• **Connection type head B:** Flying leads<br>• **Signal type:** Incremental, SSI<br>• **Cable:** 5 m, 8-wire, PUR, halogen-free<br>• **Description:** Incremental, shieldedSSI<br>• **Connection systems:** Flying leads | DOL-1208-G05MAC1 | 6032867 |
|  | • **Connection type head A:** Female connector, M12, 8-pin, straight<br>• **Connection type head B:** Flying leads<br>• **Signal type:** Incremental, SSI<br>• **Cable:** 10 m, 8-wire, PUR, halogen-free<br>• **Description:** Incremental, shieldedSSI<br>• **Connection systems:** Flying leads | DOL-1208-G10MAC1 | 6032868 |
|  | • **Connection type head A:** Female connector, M12, 8-pin, straight<br>• **Connection type head B:** Flying leads<br>• **Signal type:** Incremental, SSI<br>• **Cable:** 20 m, 8-wire, PUR, halogen-free<br>• **Description:** Incremental, shieldedSSI<br>• **Connection systems:** Flying leads | DOL-1208-G20MAC1 | 6032869 |
|  | • **Connection type head A:** Female connector, M12, 8-pin, straight<br>• **Connection type head B:** Flying leads<br>• **Signal type:** Incremental, SSI<br>• **Cable:** 25 m, 8-wire, PUR, halogen-free<br>• **Description:** Incremental, shieldedSSI<br>• **Connection systems:** Flying leads | DOL-1208-G25MAC1 | 6067859 |

| | Brief description | Type | part no. |
|---|---|---|---|
| Mounting systems | | | |
|  | • **Product family:** Stator couplings<br>• **Description:** Two-sided stator coupling, screw hole diameter 42 to 46 mm, slot width 3.2 mm | BEF-DS-DBS36 | 2066301 |

# SICK AT A GLANCE

SICK is one of the leading manufacturers of intelligent sensors and sensor solutions for industrial applications. A unique range of products and services creates the perfect basis for controlling processes securely and efficiently, protecting individuals from accidents and preventing damage to the environment.

We have extensive experience in a wide range of industries and understand their processes and requirements. With intelligent sensors, we can deliver exactly what our customers need. In application centers in Europe, Asia and North America, system solutions are tested and optimized in accordance with customer specifications. All this makes us a reliable supplier and development partner.

Comprehensive services complete our offering: SICK LifeTime Services provide support throughout the machine life cycle and ensure safety and productivity.

**For us, that is “Sensor Intelligence.”**

# WORLDWIDE PRESENCE:

Contacts and other locations –www.sick.com