ME 22,5 UT/FE TBUS KMGY - Mounting base housing

2914327

https://www.phoenixcontact.com/us/products/2914327

Please be informed that the data shown in this PDF document is generated from our online catalog. Please find the complete data in the user documentation. Our general terms of use for downloads are valid.



DIN rail housing, Lower housing part with metal foot catch, with FE contact, tall design, with vents, width: 22.6 mm, height: 99 mm, depth: 107.3 mm, color: light grey (similar RAL 7035), cross connection: DIN rail connector (optional), number of positions cross connector: 5

Your advantages

- Tool-free mounting
- Available in overall widths from 12.5 mm to 90 mm, modular extension possible
- Flammability rating V0 in accordance with UL 94
- Variety of connection technology
- Can be mounted on the DIN rail
- With integrated or DIN-rail-mountable bus connector as an option

Commercial data

Item number	2914327
Packing unit	10 pc
Minimum order quantity	10 pc
Sales key	AC08
Product key	ACHAAC
GTIN	4017918953997
Weight per piece (including packing)	42.82 g
Weight per piece (excluding packing)	32.096 g
Customs tariff number	85389099
Country of origin	DE

Technical data

Notes

General	Refer to the data sheet for the range in the download area.
General	Material of contact pads for bus connector, galvanic gold (hard gold)

Product properties

Product type	Enclosure bottom part
Housing type	DIN rail housing
Housing series	ME
Product family	ME 22,5..
Type	Lower housing parts with vents, housing cover necessary to complete the module
Max. number of positions	0)
Type	Lower housing part with metal foot catch, with FE contact, tall design
Ventilation openings present	yes

Dimensions

Dimensional drawing	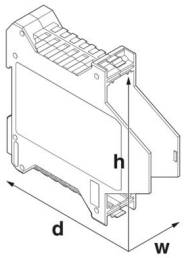
Width	22.6 mm
Height	99 mm
Depth	107.3 mm
Depth from top edge of DIN rail	100.7 mm
Depth from top edge of DIN rail to support point on upper part	68.5 mm

PCB design

PCB thickness	1.4 mm ... 1.8 mm

Material specifications

Color (Housing)	light grey (RAL 7035)
Flammability rating according to UL 94	V0
CTI according to IEC 60112	600
Housing material	Polyamide
Surface characteristics	untreated

Environmental and real-life conditions

Power dissipation single housing for 20 °C

Ambient temperature	20 °C
Reduction factor	1
Mounting position	vertical
Power dissipation	6.1 W

Power dissipation single housing for 30 °C

Ambient temperature	30 °C
Reduction factor	0.91
Mounting position	vertical
Power dissipation	5.5 W

Power dissipation single housing for 40 °C

Ambient temperature	40 °C
Reduction factor	0.81
Mounting position	vertical
Power dissipation	4.9 W

Power dissipation single housing for 50 °C

Ambient temperature	50 °C
Reduction factor	0.7
Mounting position	vertical
Power dissipation	4.3 W

Power dissipation single housing for 60 °C

Ambient temperature	60 °C
Reduction factor	0.57
Mounting position	vertical
Power dissipation	3.5 W

Power dissipation single housing for 70 °C

Ambient temperature	70 °C
Reduction factor	0.49
Mounting position	vertical
Power dissipation	3.1 W

Vibration test

Specification	IEC 60068-2-6:2007-12
Frequency	10 - 150 - 10 Hz
Sweep speed	1 octave/min
Amplitude	0.15 mm (10 Hz ... 58.1 Hz)
Acceleration	2g (58.1 Hz ... 150 Hz)
Test duration per axis	2.5 h
Test directions	X-, Y- and Z-axis

Glow-wire test

Specification	IEC 60695-2-11:2014-02

Temperature	850 °C
Time of exposure	30 s

Thermal stability / ball thrust test

Specification	IEC 60695-10-2:2014-02
Temperature	125 °C
Test duration	1 h
Force	20 N

Mechanical strength / tumbling barrel

Specification	IEC 60998-1:2002-12
Height of fall	50 cm
Frequency	10

Shocks

Specification	IEC 60068-2-27:2008-02
Pulse shape	Half-sine
Acceleration	15g
Shock duration	11 ms
Number of shocks per direction	3
Test directions	X-, Y- and Z-axis (pos. and neg.)

Degree of protection (IP code)

Specification	IEC 60529:1989-11 + AMD 1:1999-11 + AMD 2:2013-08

Ambient conditions

Max. IP code to attain	IP20
Ambient temperature (operation)	-40 °C ... 105 °C (depending on power dissipation)
Ambient temperature (storage/transport)	-40 °C ... 55 °C
Ambient temperature (assembly)	-5 °C ... 100 °C
Relative humidity (storage/transport)	80 %

PCB data

Number of PCB holders	1
Type of PCB mount	Insertion (optional latching by PCB stop)
Thickness of the PCB	1.4 mm ... 1.8 mm

Mounting

Mounting type	DIN rail mounting
Mounting position	Vertical (horizontal DIN rail)

Packaging specifications

Type of packaging	packed in cardboard
Outer packaging type	Carton

Drawings

Dimensional drawing

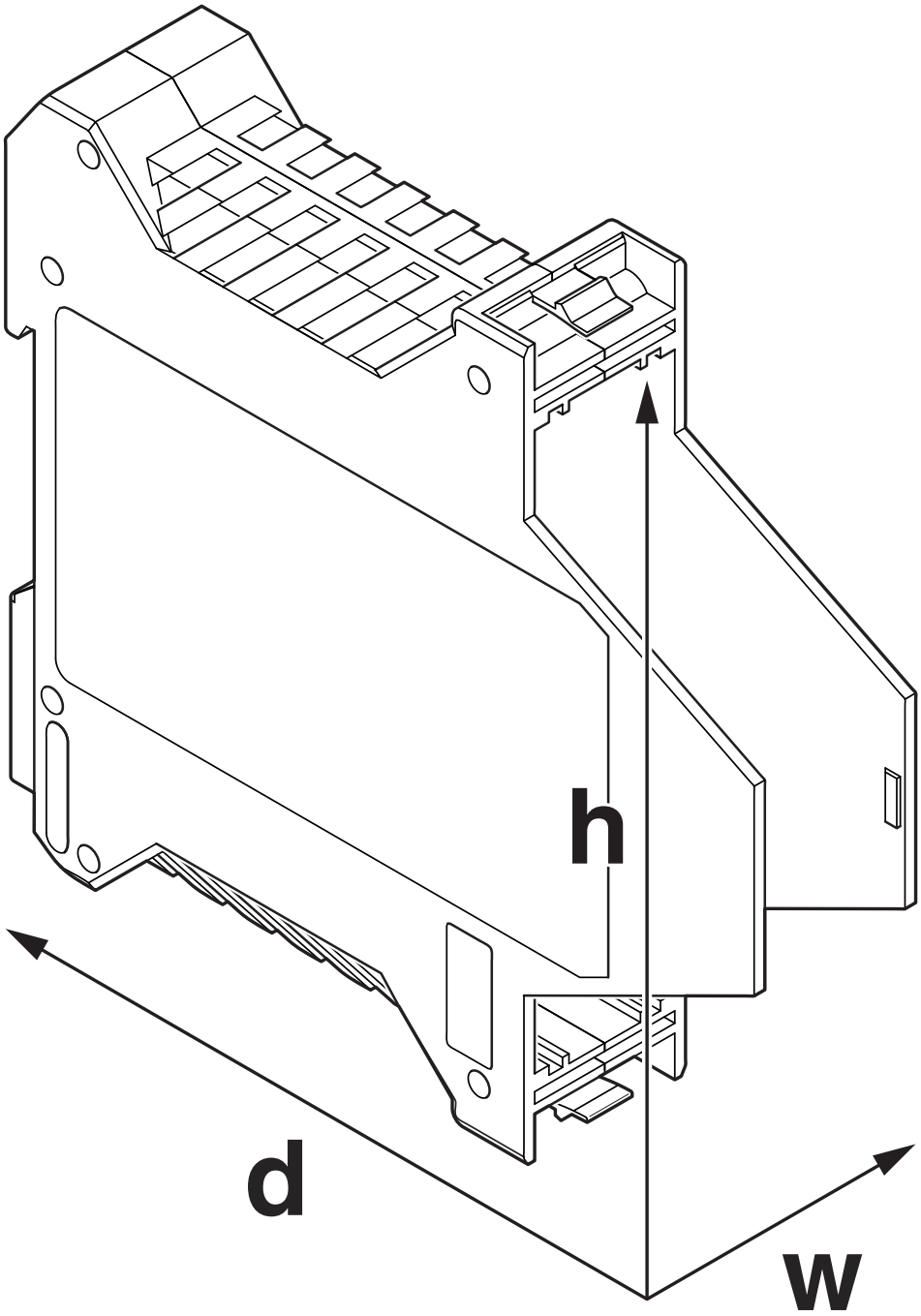

Schematic figure for illustrating the item dimensions. The figure is not of the desired product. For further details, refer to the product drawings in the “Downloads” tab.

Approvals

To download certificates, visit the product detail page: https://www.phoenixcontact.com/us/products/2914327

UL Recognized
Approval ID: FILE E 240868

Classifications

ECLASS

ECLASS-11.0	27182702
ECLASS-13.0	27190601

ETIM

ETIM 9.0	EC001031

UNSPSC

UNSPSC 21.0	31261500

Environmental product compliance

EU RoHS

Fulfills EU RoHS substance requirements	Yes, No exemptions

China RoHS

Environment friendly use period (EFUP)	EFUP-E
	No hazardous substances above the limits

EU REACH SVHC

REACH candidate substance (CAS No.)	No substance above 0.1 wt%

Mandatory accessories

ME 22,5 OT-MSTBO KMGY - Upper housing part

2907761

https://www.phoenixcontact.com/us/products/2907761



DIN rail housing, Upper housing part for connectors with header, width: 22.6 mm, height: 99 mm, depth: 45.85 mm, color: light grey (similar RAL 7035)

ME 22,5 OT-FKDSO KMGY - Upper housing part

2200323

https://www.phoenixcontact.com/us/products/2200323



DIN rail housing, Upper housing part for PCB terminal blocks with Push-in spring connection, width: 22.6 mm, height: 99 mm, depth: 45.85 mm, color: light grey (similar RAL 7035)

ME 22,5 OT-MKDSO KMGY - Upper housing part

2908469

https://www.phoenixcontact.com/us/products/2908469



DIN rail housing, Upper housing part for PCB terminal blocks with screw connection, width: 22.6 mm, height: 99 mm, depth: 45.85 mm, color: light grey (similar RAL 7035)

ME 22,5 OTU-MKDSO KMGY - Upper housing part

2278953

https://www.phoenixcontact.com/us/products/2278953



DIN rail housing, Upper housing part for PCB terminal blocks with screw connection, width: 22.6 mm, height: 99 mm, depth: 45.85 mm, color: light grey (similar RAL 7035)

ME 22,5 OT-1MSTBO KMGY - Upper housing part

2914877

https://www.phoenixcontact.com/us/products/2914877



DIN rail housing, Upper housing part for connectors with header, width: 22.6 mm, height: 99 mm, depth: 45.85 mm, color: light grey (similar RAL 7035)

ME 22,5 OT-3MSTBO KMGY - Upper housing part

2914880

https://www.phoenixcontact.com/us/products/2914880

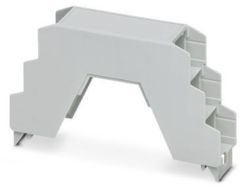

DIN rail housing, Upper housing part for connectors with header, width: 22.6 mm, height: 102 mm, depth: 60.15 mm, color: light grey (similar RAL 7035)

ME 22,5 OTP-MSTBO PS KMGY - Upper housing part

2279282

https://www.phoenixcontact.com/us/products/2279282



DIN rail housing, Upper housing part for connectors with header, width: 22.6 mm, height: 99 mm, depth: 45.85 mm, color: light grey (similar RAL 7035)

Accessories

ME LPZS - PCB stop

2906911

https://www.phoenixcontact.com/us/products/2906911



DIN rail housing, after approx. 4 cm, the ME LPZS PCB pull-out stop prevents the PCB from being removed completely and locks the PCB in place

ME DH 27 NS 35 KMGY - Spacer

2706289

https://www.phoenixcontact.com/us/products/2706289

Spacer, for protecting the input and output contacts for NS 35 DIN rails

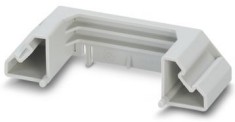

ME DH 36 NS 35 KMGY - Spacer

2706292

https://www.phoenixcontact.com/us/products/2706292

Spacers, for protection of the input or output contacts for DIN rail NS 35, width [B] 36 mm



ME B-SA/NS 35 KMGY - Cover

2706700

https://www.phoenixcontact.com/us/products/2706700



Terminal cover, 1 strip covers up to 12 terminal points, for ME-BUS male side, (female side)

EML (44X72)R-ME - Label for ME ... UT ... TBUS ... housing

0828143

https://www.phoenixcontact.com/us/products/0828143



Label for ME ... UT ... TBUS ... housing, Roll, white, unlabeled, can be labeled with: THERMOMARK ROLLMASTER 300/600, THERMOMARK X1.2, THERMOMARK ROLL X1, THERMOMARK ROLL 2.0, THERMOMARK ROLL, mounting type: adhesive, lettering field size: 44 x 72 mm, Number of individual labels: 200

ME 22,5 TBUS 1,5/ 5-ST-3,81 KMGY - DIN rail bus connectors

2713722

https://www.phoenixcontact.com/us/products/2713722



DIN rail connector, color: light grey, nominal current: 8 A (parallel contacts), rated voltage (III/2): 125 V, contact surface: Gold, number of positions: 5, product range: TBUS5-22,5.., pitch: 3.81 mm, mounting: DIN rail mounting, locking: without, mounting: without, type of packaging: packed in cardboard, Item with gold-plated contacts, bus connectors for connecting with electronics housings, 5 parallel contacts

ME 22,5 TBUS 1,5/4P1S KMGY - DIN rail bus connectors

2201732

https://www.phoenixcontact.com/us/products/2201732

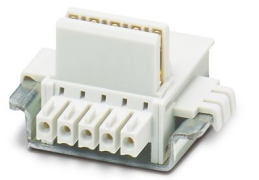

DIN rail connector, color: light grey, nominal current: 8 A, 8 A (parallel contacts) (Serial contacts), rated voltage (III/2): 50 V, number of positions: 5, product range: TBUS5-22,5.., pitch: 3.81 mm, mounting: DIN rail mounting, locking: without, mounting: without, Item with gold-plated contacts, bus connectors for connecting with electronics housings, 4 parallel contacts/1 serial contact

ME 22,5 UT/FE TBUS KMGY - Mounting base housing

2914327

https://www.phoenixcontact.com/us/products/2914327

ME 22,5 TBUS ADAPTER KMGY - DIN rail bus connectors

2201756

https://www.phoenixcontact.com/us/products/2201756

DIN rail bus adapter for ME and ME-MAX, design width: 22.5 mm, 5 parallel positions, color: light gray (similar to RAL 7035)



Phoenix Contact 2024 © - all rights reserved
https://www.phoenixcontact.com

Phoenix Contact USA
586 Fulling Mill Road
Middletown, PA 17057, United States
(+717) 944-1300
info@phoenixcon.com