Data sheet | Item number: 855-8001

Power tap; with fuse; 2,5 mm² (12 AWG) - 6 mm² (10 AWG); Phase

www.wago.com/855-8001



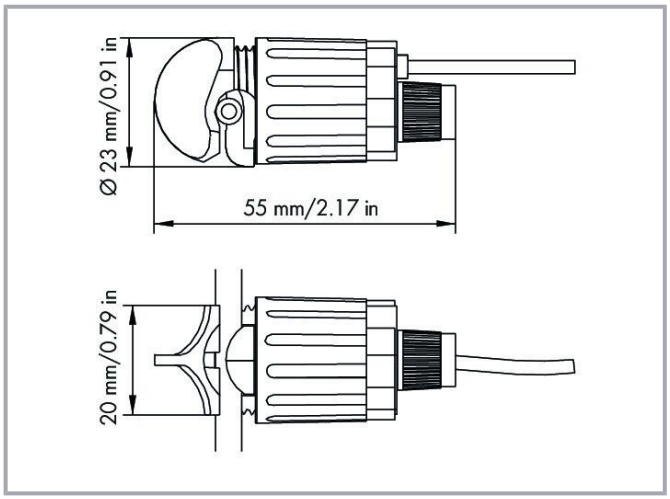

Item description

Short description:

WAGO‘s Power Taps (855 Series) easily and safely tap the measurement voltage.

This allows a fuse-protected measurement voltage to be tapped from an insulated conductor with just one turn – no tools required.

Features:

- Safely tap the measurement voltage with just one turn
- Tool-free assembly

Subject to changes. Please also observe the further product documentation!

WAGO GmbH & Co. KG
Hansastr. 27
32423 Minden
Phone: +49571 887-0 | Fax: +49571 887-169
Email: info.de@wago.com | Web: www.wago.com

Do you have any questions about our products?
We are always happy to take your call at +49 (571) 887-44222.

- Secure mounting
- Cable length: 3 m

Data

Notes

Note	Spare fuse: WAGO 855-8020

Technical data

Input

Measured variable	Voltage

Output – voltage tap

Continuous current (max.)	2 A
Fuse (voltage path)	2 A; 450 V; F; 70 kA; 5 x 25 mm (WAGO 855-8020)
Rated voltage	AC 400 V
Voltage drop	≤ 0.5 VAC

Safety and protection

Rated surge voltage	6 kV
Overvoltage category	III
Pollution degree	2
Protection type	IP20
Test voltage	AC 3 kV; 50 Hz; 1 min

Connection data

Feedthrough for measurement conductor	Ø 3 … 5 mm
Cable type	Secondary side: 1 x 1.0 mm²; flexible; with ferrule

Connection 1

Connection technology	IDC connection
Solid conductor	2.5 … 6 mm² / 14 … 10 AWG
Fine-stranded conductor	2.5 … 6 mm² / 14 … 10 AWG

WAGO GmbH & Co. KG
Hansastr. 27
32423 Minden
Phone: +49571 887-0 | Fax: +49571 887-169
Email: info.de@wago.com | Web: www.wago.com

Do you have any questions about our products?
We are always happy to take your call at +49 (571) 887-44222.

Physical data

Cable length	3 m
Width	23 mm / 0.906 inches
Height	59 mm / 2.323 inches
Depth	23 mm / 0.906 inches

Mechanical data

Mounting type	Insulation displacement connection
Mounting type	Mounting on insulated round cable
Torque range	1.5 … 2 Nm
Usability	Can be reused several times (max. 24 times)

Material data

Housing material	PA 66
Weight	25.9 g

Environmental requirements

Ambient temperature (operation)	-5 … +55 °C
Ambient temperature (storage)	-20 … +70 °C
Relative humidity	5 … 85 % (without condensation)
Operating altitude (max.)	2000 m

Standards and specifications

Conformity marking	CE
Standards/specifications	EN 60947-7-1

Commercial data

eCl@ss 10.0	27-14-11-92
eCl@ss 9.0	27-14-11-92
ETIM 8.0	EC002848
ETIM 7.0	EC002848
ECCN	NO DATA
PU (SPU)	10 (1) pcs
Packaging type	Box
Country of origin	NL

Subject to changes. Please also observe the further product documentation!

WAGO GmbH & Co. KG
Hansastr. 27
32423 Minden
Phone: +49571 887-0 | Fax: +49571 887-169
Email: info.de@wago.com | Web: www.wago.com

Do you have any questions about our products?
We are always happy to take your call at +49 (571) 887-44222.

Customs tariff number	85366990990

Environmental Product Compliance

RoHS Compliance Status	Compliant,No Exemption

Approvals / Certificates

General approvals

Logo	Approval	Additional Approval Text	Certificate name
	EAC GZO Almaty Standart	TP TC 004/2011	EAC CoC 03082

Optional accessories

Mounting

Current transformer terminal block



Item no.: 2007-8874
Compact terminal block; for current and voltage transformers; 6,00 mm²; multicoloured
www.wago.com/2007-8874



Item no.: 2007-8877
Compact terminal block; for current transformer circuit; 6,00 mm²; multicoloured
www.wago.com/2007-8877



Item no.: 2007-8875
Compact terminal block; for current transformer circuit; 6,00 mm²; multicoloured
www.wago.com/2007-8875



Item no.: 2007-8876
Compact terminal block; for 3-phase current transformer circuit; 6,00 mm²; multicoloured
www.wago.com/2007-8876



Item no.: 2007-8873
Compact terminal block; for current and voltage transformers; 6,00 mm²; multicoloured
www.wago.com/2007-8873

Fuse

Fuse



Item no.: 855-8020
Miniature fuse; 5 x 25 mm; with indicator
www.wago.com/855-8020

Signal conditioner

Subject to changes. Please also observe the further product documentation!

WAGO GmbH & Co. KG
Hansastr. 27
32423 Minden
Phone: +49571 887-0 | Fax: +49571 887-169
Email: info.de@wago.com | Web: www.wago.com

Do you have any questions about our products?
We are always happy to take your call at +49 (571) 887-44222.

Power measurement module

	**Item no.: 2857-570/024-001** 3-Phase Power Measurement Module; 3x277/480 V/1 A; Modbus RTU; Digital output; Configuration via software; Supply voltage: 24 VDC	www.wago.com/2857-570/024-001
	**Item no.: 2857-570/024-005** 3-Phase Power Measurement Module; 3x277/480 V/5 A; Modbus RTU; Digital output; Configuration via software; Supply voltage: 24 VDC	www.wago.com/2857-570/024-005
	**Item no.: 2857-570/024-000** 3-Phase Power Measurement Module; 3x277/480 V/RC; Modbus RTU; Digital output; Configuration via software; Supply voltage: 24 VDC	www.wago.com/2857-570/024-000

Voltage signal conditioner

	**Item no.: 857-560** Voltage signal conditioner; Voltage input signal; Current and voltage output signal; Digital output; Configuration via software; Supply voltage: 24 VDC; 6 mm module width	www.wago.com/857-560

Current signal conditioner

	**Item no.: 857-569** Power signal conditioner; Current and voltage input signal; Current and voltage output signal; Digital output; Configuration via software; Supply voltage: 24 VDC; 6 mm module width	www.wago.com/857-569

Downloads

Documentation

Bid Text

855-8001 docx - Datei	2019 年2月20 日	docx 17.6 kB	Download
855-8001 X81 - Datei	2019 年2月19 日	xml 5.1 kB	Download

Instruction Leaflet

Potentialabgriffe		pdf 79.6 kB	Download

Additional Information

Disposal and Recycling Electrical and electronic equipment, Batteries, Packaging	V 1.1.0 2022 年8月18 日	pdf 2.2 MB	Download

Subject to changes. Please also observe the further product documentation!

WAGO GmbH & Co. KG
Hansastr. 27
32423 Minden
Phone: +49571 887-0 | Fax: +49571 887-169
Email: info.de@wago.com | Web: www.wago.com

Do you have any questions about our products?
We are always happy to take your call at +49 (571) 887-44222.

CAD/CAE-Data

CAD data

2D/3D Models 855-8001	URL	Download

Asset Administration Shell

Asset Administration Shell 855-8001	URL	Download

Environmental Product Compliance

Compliance Search

Environmental Product Compliance 855-8001 Power tap; with fuse; 2,5 mm² (12 AWG) - 6 mm² (10 AWG); Phase	URL	Download

Installation Notes

Installation

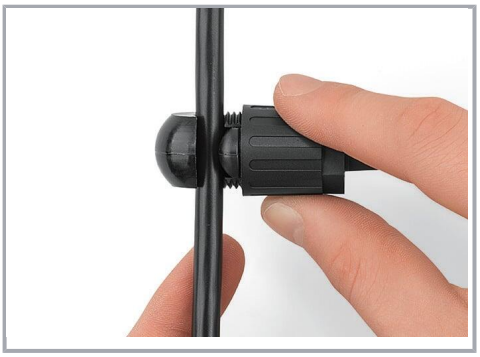

Installation on an insulated conductor with insulation displacement connection (IDC)



Integrated SIBA fuse to protect equipment and conductor

WAGO GmbH & Co. KG
Hansastr. 27
32423 Minden
Phone: +49571 887-0 | Fax: +49571 887-169
Email: info.de@wago.com | Web: www.wago.com

Do you have any questions about our products?
We are always happy to take your call at +49 (571) 887-44222.