Data sheet

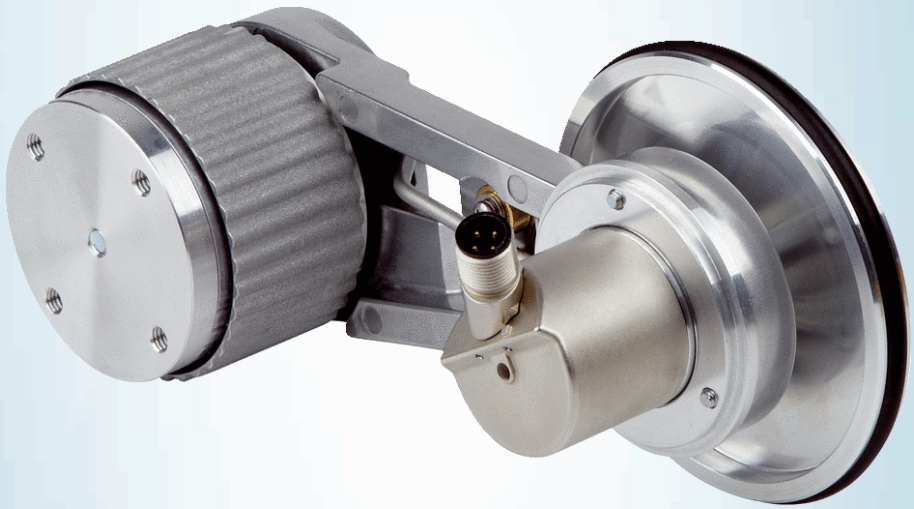

MWS120-22M3AC03600

MWS120

MEASURING WHEEL ENCODERS

SICK
Sensor Intelligence.

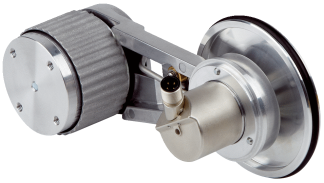

Illustration may differ

Ordering information

Type	part no.
MWS120-22M3AC03600	1114168

Included in delivery: AHS36B-SCAC003600 (1), BEF-MWS120-ARM (1), BEF-FA-020-036 (1), BEF-MR010030R (1)

Other models and accessories ➜ www.sick.com/MWS120

Detailed technical data

Safety-related parameters

$MTTF_D$ (mean time to dangerous failure)	230 years (EN ISO 13849-1) [1) 2)]

[1)] This product is a standard product and does not constitute a safety component as defined in the Machinery Directive. Calculation based on nominal load of components, average ambient temperature 40 °C, frequency of use 8760 h/a. All electronic failures are considered hazardous. For more information, see document no. 8015532.

[2)] Value refers to the mounted encoder.

Performance

Number of steps per revolution (max. resolution)	3,600
Measuring increment (resolution in mm/pulse)	0.073 [1)] [2)]
Repeatability	< 0.1 mm [3)]

[1)] Calculation example: Circumference of wheel / pulses per revolution = 200 mm / 16384 pulses per revolution = 0,012mm/pulse.

[2)] Value based on measuring wheel circumference. The measuring wheel circumference depends on manufacturing tolerances, wear and tear, the selected spring tensioning force, and the behavior of the measurement wheel surface at different temperatures and on different measurement surfaces. To obtain the most accurate measurement results, we recommend performing a reference run for positioning tasks so that application-specific measuring wheel characteristics can be taken into account.

[3)] Value is based on the mechanics. Backlash of the measuring wheel mechanics, is at a minimum. This enables a precise and repeatable measurement results.

Interfaces

Communication interface	SSI

Electrical data

Connection type	Male connector, M12, 8-pin, universal
Power consumption	≤ 1.5 W (without load)
Supply voltage	4.5 V ... 32 V
Reverse polarity protection	✓

Mechanical data

Measuring wheel circumference	300 mm [1]
Measuring wheel surface	O-ring NBR70
Mounting	Measuring wheel mounted at the front
Spring arm mechanism material	
Spring element	Stainless steel
Measuring wheel, spring arm	Aluminum
Start up torque	0.5 Ncm
Operating torque	< 0.5 Ncm
Bearing lifetime	3.6 x 10^8 revolutions
Minimum spring tension force	4 N [2] [3]
Max. permissible working area for the spring (continuous operation)	± 10 mm
Service life of spring element	> 1.5 million cycles
Mounting position relative to the measuring object	Preferably from above, from below possible [4]
Mounted encoder	AHS36 SSI, AHS36B-SCAC003600, 1102314
Flange plates	BEF-FA-020-036, 2072298
Mounted mechanic	BEF-MWS120-ARM, 2118239
Attached measuring wheel	BEF-MR010030R, 2049278

[1] The surface of a measuring wheel is subject to wear. This depends on contact pressure, acceleration behavior in the application, traversing speed, measurement surface, mechanical alignment of the measuring wheel, temperature, and ambient conditions. We recommend you regularly check the condition of the measuring wheel and replace as required.

[2] The right spring tension force for the application shall keep the slippage at a minimum in the application working conditions and measuring surface, without damaging the measuring surface.

[3] The clamping force can be set in 6 fixed increments of 4 N. 4 N corresponds to one increment.

[4] When mounted from below, the encoder weight during spring pretensioning must be taken into account.

Ambient data

EMC	According to EN 61000-6-2 and EN 61000-6-3
Operating temperature range	–30 °C ... +80 °C [1]
Storage temperature range	–40 °C ... +100 °C [1]

[1] This value reflects the smallest temperature value of the installed products. For more information, please look at the individual data sheets.

Certificates

EU declaration of conformity	✓
UK declaration of conformity	✓
ACMA declaration of conformity	✓
Moroccan declaration of conformity	✓
China-RoHS	✓

Classifications

ECLASS 5.0	27270501
ECLASS 5.1.4	27270501
ECLASS 6.0	27270590
ECLASS 6.2	27270590

ECLASS 7.0	27270501
ECLASS 8.0	27270501
ECLASS 8.1	27270501
ECLASS 9.0	27270501
ECLASS 10.0	27270790
ECLASS 11.0	27270707
ECLASS 12.0	27270504
ETIM 5.0	EC001486
ETIM 6.0	EC001486
ETIM 7.0	EC001486
ETIM 8.0	EC001486
UNSPSC 16.0901	41112113

Dimensional drawing

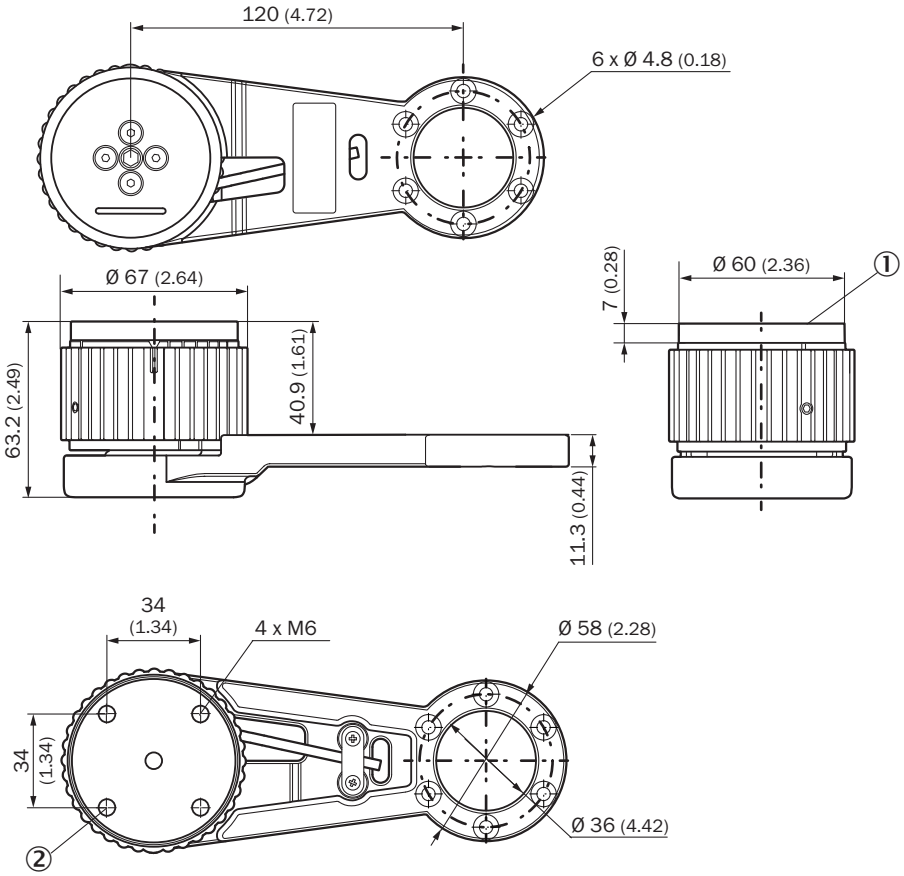

Dimensions in mm (inch)
① Adapter plate
② Holes of the adapter plate, maximum thread depth 6 mm

Dimensional drawing

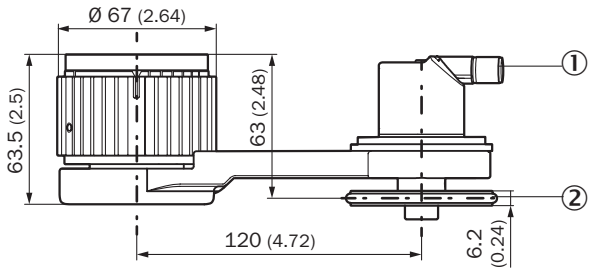

Dimensions in mm (inch)
① Please refer to the dimensional drawings in the respective data sheet for the installed encoder.
② The measuring wheel circumference and surface depend on the installed measuring wheel.

PIN assignment M12 male connector, 8-pin and cable, 8-wire, SSI/Gray

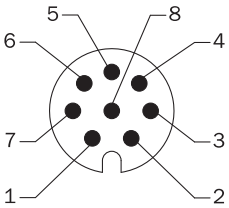

view of M12 male device connector on encoder

PIN	Wire colors (cable connection)	Signal	Explanation
1	Brown	Data -	Interface signals
2	White	Data +	Interface signals
3	Black	V/R	Sequence in direction of rotation
4	Pink	SET	Electronic adjustmen-tInterface signals
5	Yellow	Clock +	Interface signals
6	Purple	Clock -	Interface signals
7	Blue	GND	Ground connection
8	Red	U_S	Operating voltage
–	–	Screen	Screen connected to hous-ing on encoder side. Connect-ed to ground on control side.

Recommended accessories

Other models and accessories ➜ www.sick.com/MWS120

	Brief description	Type	part no.
measuring wheels and measuring wheel mechanics			
	• **Product segment:** Measuring wheels and measuring wheel mechanics • **Product family:** Measuring wheels • **Description:** Aluminium measuring wheel with O-ring (NBR70) for 10 mm solid shaft, circumference 200 mm	BEF-MR010020R	2055224
	• **Product segment:** Measuring wheels and measuring wheel mechanics • **Product family:** Measuring wheels • **Description:** Aluminium measuring wheel with O-ring (NBR70) for 10 mm solid shaft, circumference 300 mm	BEF-MR010030R	2049278
	• **Product segment:** Measuring wheels and measuring wheel mechanics • **Product family:** Measuring wheels • **Description:** Measuring wheel with O-ring (NBR70) for 10 mm solid shaft, circumference 500 mm	BEF-MR010050R	2055227
	• **Product segment:** Measuring wheels and measuring wheel mechanics • **Product family:** Measuring wheels • **Description:** Aluminum measuring wheel with cross-knurled surface for 10 mm solid shaft, circumference 500 mm	BEF-MR10500AK	4084733
	• **Product segment:** Measuring wheels and measuring wheel mechanics • **Product family:** Measuring wheels • **Description:** Aluminum measuring wheel with cross-knurled surface for 10 mm solid shaft, circumference 200 mm	BEF-MR10200AK	4084737
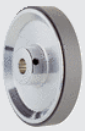	• **Product segment:** Measuring wheels and measuring wheel mechanics • **Product family:** Measuring wheels • **Description:** Aluminum measuring wheel with smooth polyurethane surface for 10 mm solid shaft, circumference 200 mm	BEF-MR10200AP	4084738
	• **Product segment:** Measuring wheels and measuring wheel mechanics • **Product family:** Measuring wheels • **Description:** Aluminum measuring wheel with ridged polyurethane surface for 10 mm solid shaft, circumference 200 mm	BEF-MR10200APG	4084740
	• **Product segment:** Measuring wheels and measuring wheel mechanics • **Product family:** Measuring wheels	BEF-MR10200APN	4084739

	Brief description	Type	part no.
	• **Description:** Aluminum measuring wheel with studded polyurethane surface for 10 mm solid shaft, circumference 200 mm		
	• **Product segment:** Measuring wheels and measuring wheel mechanics • **Product family:** Measuring wheels • **Description:** Aluminum measuring wheel with smooth polyurethane surface for 10 mm solid shaft, circumference 500 mm	BEF-MR10500AP	4084734
	• **Product segment:** Measuring wheels and measuring wheel mechanics • **Product family:** Measuring wheels • **Description:** Aluminum measuring wheel with ridged polyurethane surface for 10 mm solid shaft, circumference 500 mm	BEF-MR10500APG	4084736
	• **Product segment:** Measuring wheels and measuring wheel mechanics • **Product family:** Measuring wheels • **Description:** Aluminum measuring wheel with studded polyurethane surface for 10 mm solid shaft, circumference 500 mm	BEF-MR10500APN	4084735
	• **Product segment:** Measuring wheels and measuring wheel mechanics • **Product family:** Measuring wheel mechanics • **Description:** Spring arm for linear measurement with contact, spring contact pressure manually adjustable without tools in 6 increments of 4 N from 0 ... 24 N, can be combined with separately available encoders and measuring wheels. • **Items supplied:** MWS120 spring arm (part number: 2118239), 3 pcs. M4 x 16 cylinder head screws for adapter or encoder mounting • **Suitable for:** MWS120, direct mounting Ø 60 mm face mount flange encoder with mechanical shaft design “S4” = Ø 10 mm, DBS60, DFS60, AFS60 AFM60. Ø 36 mm encoders such as AHS/	BEF-MWS120-ARM	2118239

	Brief description	Type	part no.
	AHM36 can be mounted with an adapter flange (part no.: 2072298), MWS120 mounting bracket (part number: 2113284)		
	• **Product segment:** Measuring wheels and measuring wheel mechanics • **Product family:** Measuring wheels • **Description:** Mounting bracket for MWS120 measuring wheel system and SPEETEC 1D laser surface motion sensors • **Suitable for:** MWS120, NCV50 (in conjunction with BEF-WN-NCV50 mounting bracket part no.: 2117456)	BEF-WF-MWS-NCV	2113284
	• **Product segment:** Measuring wheels and measuring wheel mechanics • **Product family:** Measuring wheels • **Description:** Aluminum measuring wheel with cross-knurled surface for 10 mm solid shaft, circumference 300 mm	BEF-MR10300AK	2115703
	• **Product segment:** Measuring wheels and measuring wheel mechanics • **Product family:** Measuring wheels • **Description:** Aluminum measuring wheel with smooth polyurethane surface for 10 mm solid shaft, circumference 300 mm	BEF-MR10300AP	2118512
	• **Product segment:** Measuring wheels and measuring wheel mechanics • **Product family:** Measuring wheels • **Description:** Aluminum measuring wheel with ridged polyurethane surface for 10 mm solid shaft, circumference 300 mm	BEF-MR10300APG	2118496
	• **Product segment:** Measuring wheels and measuring wheel mechanics • **Product family:** Measuring wheels • **Description:** Aluminum measuring wheel with studded polyurethane surface for 10 mm solid shaft, circumference 300 mm	BEF-MR10300APN	2118494
Mounting systems			
	• **Description:** Flange adapter, adapts face mount flange with 20 mm centering collar to 36 mm servo flange • **Items supplied:** Flange adapter, screws for encoder mounting (3 pcs. M3 x 14 cylinder head)	BEF-FA-020-036	2072298

	Brief description	Type	part no.
connectors and cables			
	• **Connection type head A:** Male connector, M12, 8-pin, straight, A-coded • **Description:** Shielded • **Connection systems:** Screw-type terminals • **Permitted cross-section:** ≤ 0.5 mm² • **Application:** Hygienic and washdown zones	YM12ES8-0050S5586A	2097337
	• **Connection type head A:** Female connector, M12, 8-pin, straight, A-coded • **Description:** Shielded • **Connection systems:** Screw-type terminals • **Permitted cross-section:** 0.25 mm² ... 0.5 mm² • **Application:** Hygienic and washdown zones	YF12ES8-0050S5586A	2097334
	• **Connection type head A:** Female connector, M12, 8-pin, straight • **Connection type head B:** Flying leads • **Signal type:** Incremental, SSI • **Cable:** 2 m, 8-wire, PUR, halogen-free • **Description:** Incremental, shieldedSSI • **Connection systems:** Flying leads	DOL-1208-G02MAC1	6032866
	• **Connection type head A:** Female connector, M12, 8-pin, straight • **Connection type head B:** Flying leads • **Signal type:** Incremental, SSI • **Cable:** 5 m, 8-wire, PUR, halogen-free • **Description:** Incremental, shieldedSSI • **Connection systems:** Flying leads	DOL-1208-G05MAC1	6032867
	• **Connection type head A:** Female connector, M12, 8-pin, straight • **Connection type head B:** Flying leads • **Signal type:** Incremental, SSI • **Cable:** 10 m, 8-wire, PUR, halogen-free • **Description:** Incremental, shieldedSSI • **Connection systems:** Flying leads	DOL-1208-G10MAC1	6032868
	• **Connection type head A:** Female connector, M12, 8-pin, straight • **Connection type head B:** Flying leads • **Signal type:** Incremental, SSI • **Cable:** 20 m, 8-wire, PUR, halogen-free • **Description:** Incremental, shieldedSSI • **Connection systems:** Flying leads	DOL-1208-G20MAC1	6032869

SICK AT A GLANCE

SICK is one of the leading manufacturers of intelligent sensors and sensor solutions for industrial applications. A unique range of products and services creates the perfect basis for controlling processes securely and efficiently, protecting individuals from accidents and preventing damage to the environment.

We have extensive experience in a wide range of industries and understand their processes and requirements. With intelligent sensors, we can deliver exactly what our customers need. In application centers in Europe, Asia and North America, system solutions are tested and optimized in accordance with customer specifications. All this makes us a reliable supplier and development partner.

Comprehensive services complete our offering: SICK LifeTime Services provide support throughout the machine life cycle and ensure safety and productivity.

For us, that is “Sensor Intelligence.”

WORLDWIDE PRESENCE:

Contacts and other locations –www.sick.com