PP-H 1,5/S/1-R RD - Plug

3212695

https://www.phoenixcontact.com/us/products/3212695

Please be informed that the data shown in this PDF document is generated from our online catalog. Please find the complete data in the user documentation. Our general terms of use for downloads are valid.



Plug, nom. voltage: 500 V, nominal current: 17.5 A, number of connections: 1, number of positions: 1, connection method: Push-in connection, 1 level, Rated cross section: 1.5 mm^2, cross section: 0.14 mm^2 - 1.5 mm^2, color: red

Product description

Connector element right, left housing with engagement pin, right closed with cover

Your advantages

- Large-surface labeling option
- The Push-in technology COMBI plugs for self-assembly provide solutions that users can implement themselves

Commercial data

Item number	3212695
Packing unit	50 pc
Minimum order quantity	50 pc
Sales key	BE22
Product key	BE2244
GTIN	4046356915076
Weight per piece (including packing)	2.053 g
Weight per piece (excluding packing)	1.98 g
Customs tariff number	85366990
Country of origin	PL

Technical data

Product properties

Product type	Terminal plug
Area of application	Machine building
	Plant engineering
Number of positions	1
Pitch	3.5 mm
Number of connections	1
Number of rows	1
Type	other
Potentials	1

Insulation characteristics

Overvoltage category	III
Degree of pollution	3

Electrical properties

Rated surge voltage	6 kV
Maximum power dissipation for nominal condition	0.56 W

Connection data

Number of connections per level	1
Nominal cross section	1.5 mm²

1 level

Stripping length	8 mm
Internal cylindrical gage	A1 / B1
Connection in acc. with standard	IEC 61984
Conductor cross section rigid	0.14 mm² ... 1.5 mm²
Cross section AWG	26 ... 16 (converted acc. to IEC)
Conductor cross section flexible	0.14 mm² ... 1.5 mm²
Conductor cross section, flexible [AWG]	26 ... 16 (converted acc. to IEC)
Conductor cross-section flexible (ferrule without plastic sleeve)	0.14 mm² ... 1.5 mm²
Flexible conductor cross section (ferrule with plastic sleeve)	0.14 mm² ... 1 mm²
Nominal current	17.5 A (observe derating)
Maximum load current	17.5 A (with 1.5 mm² conductor cross section)
Nominal voltage	500 V
Nominal cross section	1.5 mm²

1 level Connection cross sections directly pluggable

Conductor cross section rigid	0.25 mm² ... 1.5 mm²
Conductor cross-section flexible (ferrule without plastic sleeve)	0.34 mm² ... 1.5 mm²
Flexible conductor cross section (ferrule with plastic sleeve)	0.34 mm² ... 1 mm²

Dimensions

Width	3.5 mm
Height	16.5 mm
Depth	31.3 mm
Pitch	3.5 mm

Material specifications

Color	red
Flammability rating according to UL 94	V0
Insulating material group	I
Insulating material	PA
Static insulating material application in cold	-60 °C
Temperature index of insulation material (DIN EN 60216-1 (VDE 0304-21))	125 °C
Relative insulation material temperature index (Elec., UL 746 B)	125 °C

Mechanical properties

Mechanical data

Open side panel	Yes

Environmental and real-life conditions

Ambient conditions

Ambient temperature (operation)	-60 °C (max. operating temperature see derating curve)
Ambient temperature (storage/transport)	-25 °C ... 60 °C (for a short time, no longer than 24 h, -60°C to +70°C)
Ambient temperature (assembly)	-5 °C ... 70 °C
Ambient temperature (actuation)	-5 °C ... 70 °C
Permissible humidity (operation)	20 % ... 90 %
Permissible humidity (storage/transport)	30 % ... 70 %

Standards and regulations

Connection in acc. with standard	IEC 61984

Mounting

Assembly note	Use of a parallel pressing tool is recommended for easy latching of the COMBI connector and coupling elements for self-assembly

Drawings

Diagram

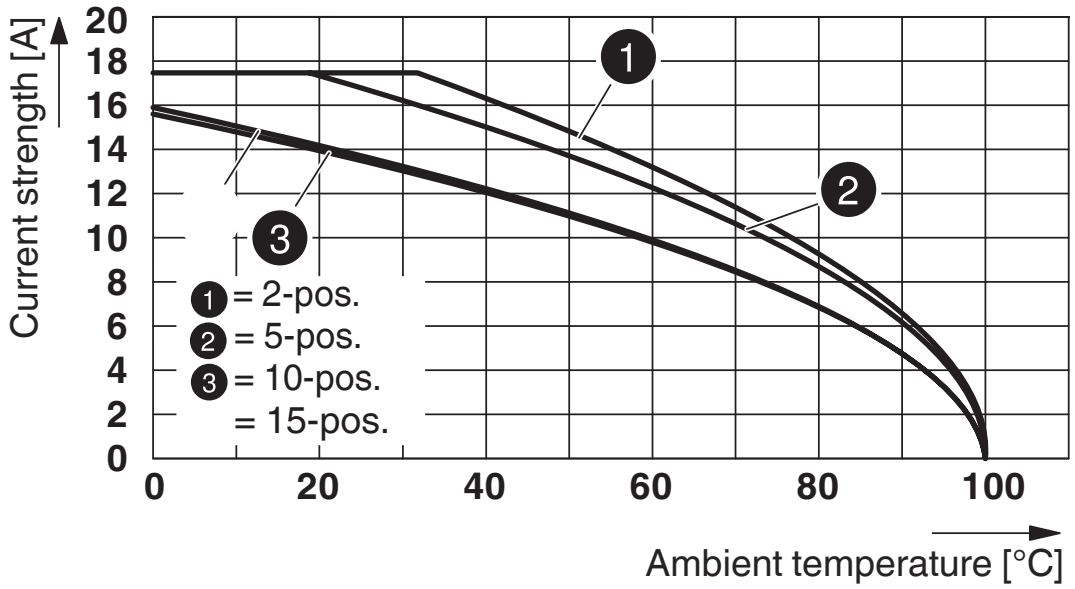

Schematic diagram

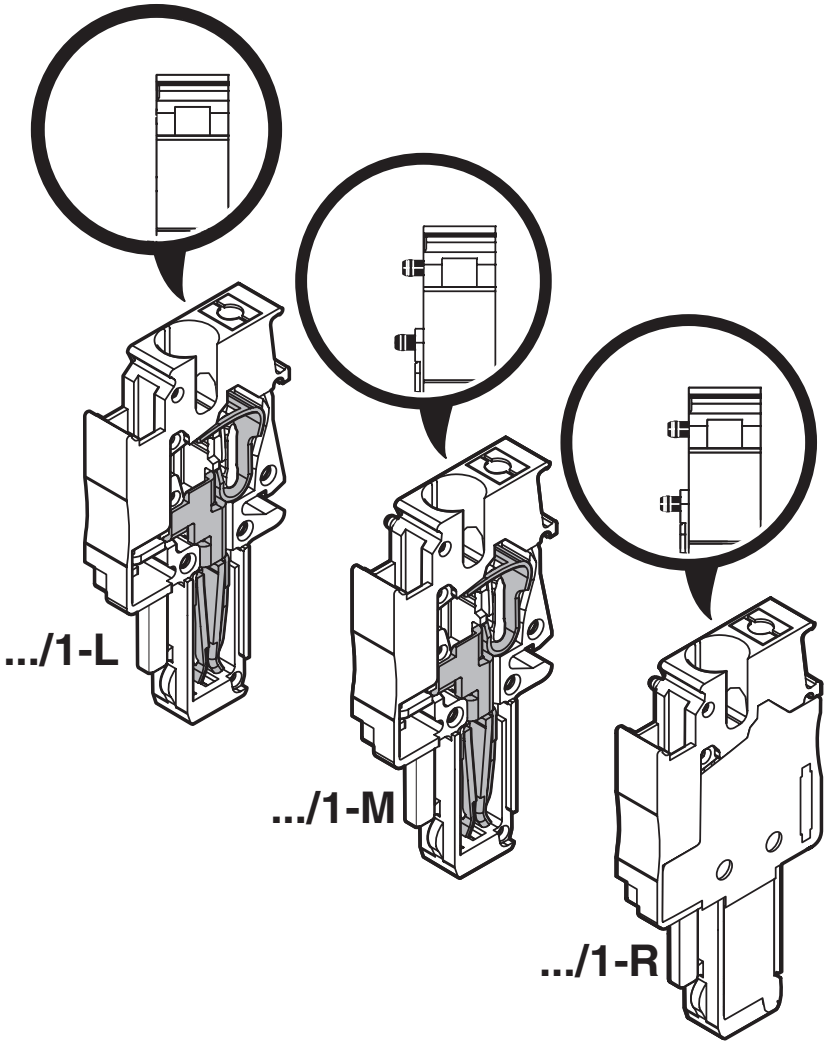

Circuit diagram



Approvals

To download certificates, visit the product detail page: https://www.phoenixcontact.com/us/products/3212695

CSA
Approval ID: 2030668

Classifications

ECLASS

ECLASS-11.0	27141151
ECLASS-12.0	27141151
ECLASS-13.0	27250306

ETIM

ETIM 9.0	EC002021

UNSPSC

UNSPSC 21.0	39121400

Environmental product compliance

EU RoHS

Fulfills EU RoHS substance requirements	Yes, No exemptions

China RoHS

Environment friendly use period (EFUP)	EFUP-E
	No hazardous substances above the limits

EU REACH SVHC

REACH candidate substance (CAS No.)	No substance above 0.1 wt%

Accessories

PR 1,5/S - Latching

3212882

https://www.phoenixcontact.com/us/products/3212882



Latching, width: 3.3 mm, height: 28.9 mm, number of positions: 1, color: orange

PR 1,5/S/2 - Latching

3212895

https://www.phoenixcontact.com/us/products/3212895



Latching, width: 6.8 mm, height: 28.9 mm, number of positions: 2, color: orange

PRZ 1,5/S - Latching

3212905

https://www.phoenixcontact.com/us/products/3212905



Latching, length: 59 mm, color: orange

PH 1,5/S/3 - Cable housing

3212756

https://www.phoenixcontact.com/us/products/3212756



Cable housing, pitch: 10.5 mm, depth: 36.8 mm, width: 10.5 mm, height: 19.9 mm, number of positions: 3, color: gray

PH 1,5/S/4 - Cable housing

3212769

https://www.phoenixcontact.com/us/products/3212769



Cable housing, pitch: 14 mm, depth: 36.8 mm, width: 14 mm, height: 19.9 mm, number of positions: 4, color: gray

PH 1,5/S/5 - Cable housing

3212772

https://www.phoenixcontact.com/us/products/3212772



Cable housing, pitch: 17.5 mm, depth: 36.8 mm, width: 17.5 mm, height: 19.9 mm, number of positions: 5, color: gray

PH 1,5/S/6 - Cable housing

3212785

https://www.phoenixcontact.com/us/products/3212785



Cable housing, pitch: 21 mm, depth: 36.8 mm, width: 21 mm, height: 19.9 mm, number of positions: 6, color: gray

PH 1,5/S/7 - Cable housing

3212798

https://www.phoenixcontact.com/us/products/3212798



Cable housing, pitch: 24.5 mm, depth: 36.8 mm, width: 24.5 mm, height: 19.9 mm, number of positions: 7, color: gray

PH 1,5/S/8 - Cable housing

3212808

https://www.phoenixcontact.com/us/products/3212808



Cable housing, pitch: 28 mm, depth: 36.8 mm, width: 28 mm, height: 19.9 mm, number of positions: 8, color: gray

PH 1,5/S/9 - Cable housing

3212811

https://www.phoenixcontact.com/us/products/3212811



Cable housing, pitch: 31.5 mm, depth: 36.8 mm, width: 31.5 mm, height: 19.9 mm, number of positions: 9, color: gray

PH 1,5/S/10 - Cable housing

3212824

https://www.phoenixcontact.com/us/products/3212824



Cable housing, pitch: 35 mm, depth: 36.8 mm, width: 35 mm, height: 19.9 mm, number of positions: 10, color: gray

PH 1,5/S/11 - Cable housing

3212837

https://www.phoenixcontact.com/us/products/3212837



Cable housing, pitch: 38.5 mm, depth: 36.8 mm, width: 38.5 mm, height: 19.9 mm, number of positions: 11, color: gray

PH 1,5/S/12 - Cable housing

3212840

https://www.phoenixcontact.com/us/products/3212840



Cable housing, pitch: 42 mm, depth: 36.8 mm, width: 42 mm, height: 19.9 mm, number of positions: 12, color: gray

PH 1,5/S/13 - Cable housing

3212853

https://www.phoenixcontact.com/us/products/3212853



Cable housing, pitch: 45.5 mm, depth: 36.8 mm, width: 45.5 mm, height: 19.9 mm, number of positions: 13, color: gray

PH 1,5/S/14 - Cable housing

3212866

https://www.phoenixcontact.com/us/products/3212866

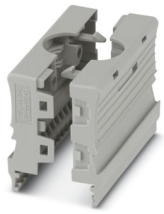

Cable housing, pitch: 49 mm, depth: 36.8 mm, width: 49 mm, height: 19.9 mm, number of positions: 14, color: gray

PH 1,5/S/15 - Cable housing

3212879

https://www.phoenixcontact.com/us/products/3212879



Cable housing, pitch: 52.5 mm, depth: 36.8 mm, width: 52.5 mm, height: 19.9 mm, number of positions: 15, color: gray

PP-H 1,5/S/1-R RD - Plug

3212695

https://www.phoenixcontact.com/us/products/3212695

AI-S 1 - 8 TQ - Ferrule

1200293

https://www.phoenixcontact.com/us/products/1200293



Ferrule, S-Slimline, sleeve length: 8 mm, color: turquoise

PP-H 1,5/S/1-L - Plug

3212659

https://www.phoenixcontact.com/us/products/3212659



Plug, nom. voltage: 500 V, nominal current: 17.5 A, number of connections: 1, number of positions: 1, connection method: Push-in connection, 1 level, Rated cross section: 1.5 mm^2, cross section: 0.14 mm^2 - 1.5 mm^2, color: gray

PP-H 1,5/S/1-R RD - Plug

3212695

https://www.phoenixcontact.com/us/products/3212695

PP-H 1,5/S/1-L BU - Plug

3212662

https://www.phoenixcontact.com/us/products/3212662



Plug, nom. voltage: 500 V, nominal current: 17.5 A, number of connections: 1, number of positions: 1, connection method: Push-in connection, 1 level, Rated cross section: 1.5 mm^2, cross section: 0.14 mm^2 - 1.5 mm^2, color: blue

PP-H 1,5/S/1-L GNYE - Plug

3212675

https://www.phoenixcontact.com/us/products/3212675



Plug, nom. voltage: 500 V, nominal current: 17.5 A, number of connections: 1, number of positions: 1, connection method: Push-in connection, 1 level, Rated cross section: 1.5 mm^2, cross section: 0.14 mm^2 - 1.5 mm^2, color: green-yellow

PP-H 1,5/S/1-R RD - Plug

3212695

https://www.phoenixcontact.com/us/products/3212695

PP-H 1,5/S/1-L RD - Plug

3212696

https://www.phoenixcontact.com/us/products/3212696



Plug, nom. voltage: 500 V, nominal current: 17.5 A, number of connections: 1, number of positions: 1, connection method: Push-in connection, 1 level, Rated cross section: 1.5 mm^2, cross section: 0.14 mm^2 - 1.5 mm^2, color: red

PP-H 1,5/S/1-L/P-GN - Plug

1186132

https://www.phoenixcontact.com/us/products/1186132



Plug, nom. voltage: 500 V, nominal current: 17.5 A, number of connections: 1, number of positions: 1, connection method: Push-in connection, 1 level, Rated cross section: 1.5 mm^2, cross section: 0.14 mm^2 - 1.5 mm^2, color: gray

PP-H 1,5/S/1-R RD - Plug

3212695

https://www.phoenixcontact.com/us/products/3212695

PP-H 1,5/S/1-M - Plug

3212688

https://www.phoenixcontact.com/us/products/3212688



Plug, nom. voltage: 500 V, nominal current: 17.5 A, number of connections: 1, number of positions: 1, connection method: Push-in connection, 1 level, Rated cross section: 1.5 mm^2, cross section: 0.14 mm^2 - 1.5 mm^2, color: gray

PP-H 1,5/S/1-M BK - Plug

3212694

https://www.phoenixcontact.com/us/products/3212694



Plug, nom. voltage: 500 V, nominal current: 17.5 A, number of connections: 1, number of positions: 1, connection method: Push-in connection, 1 level, Rated cross section: 1.5 mm^2, cross section: 0.14 mm^2 - 1.5 mm^2, color: gray

PP-H 1,5/S/1-R RD - Plug

3212695

https://www.phoenixcontact.com/us/products/3212695

PP-H 1,5/S/1-M BU - Plug

3212691

https://www.phoenixcontact.com/us/products/3212691



Plug, nom. voltage: 500 V, nominal current: 17.5 A, number of connections: 1, number of positions: 1, connection method: Push-in connection, 1 level, Rated cross section: 1.5 mm^2, cross section: 0.14 mm^2 - 1.5 mm^2, color: blue

PP-H 1,5/S/1-M GNYE - Plug

3212701

https://www.phoenixcontact.com/us/products/3212701



Plug, nom. voltage: 500 V, nominal current: 17.5 A, number of connections: 1, number of positions: 1, connection method: Push-in connection, 1 level, Rated cross section: 1.5 mm^2, cross section: 0.14 mm^2 - 1.5 mm^2, color: green-yellow

PP-H 1,5/S/1-R RD - Plug

3212695

https://www.phoenixcontact.com/us/products/3212695

PP-H 1,5/S/1-M RD - Plug

3212692

https://www.phoenixcontact.com/us/products/3212692



Plug, nom. voltage: 500 V, nominal current: 17.5 A, number of connections: 1, number of positions: 1, connection method: Push-in connection, 1 level, Rated cross section: 1.5 mm^2, cross section: 0.14 mm^2 - 1.5 mm^2, color: red

PP-H 1,5/S/1-M/P-GN - Plug

1186129

https://www.phoenixcontact.com/us/products/1186129



Plug, nom. voltage: 500 V, nominal current: 17.5 A, number of connections: 1, number of positions: 1, connection method: Push-in connection, 1 level, Rated cross section: 1.5 mm^2, cross section: 0.14 mm^2 - 1.5 mm^2, color: gray

ZBF 3,5:UNBEDRUCKT - Zack Marker strip, flat

0829392

https://www.phoenixcontact.com/us/products/0829392



Zack Marker strip, flat, Strip, white, unlabeled, can be labeled with: PLOTMARK, CMS-P1-PLOTTER, mounting type: snapped, for terminal block width: 3.5 mm, lettering field size: 3.5 x 5.2 mm, Number of individual labels: 10

ZBF 3,5 CUS - Zack Marker strip, flat

0829394

https://www.phoenixcontact.com/us/products/0829394



Zack Marker strip, flat, can be ordered: Strip, white, labeled according to customer specifications, mounting type: snap into flat marker groove, for terminal block width: 3.5 mm, lettering field size: 3.5 x 5.2 mm, Number of individual labels: 10

ZBF 3,5,LGS:FORTL.ZAHLEN - Zack Marker strip, flat

0801406

https://www.phoenixcontact.com/us/products/0801406



Zack Marker strip, flat, Strip, white, labeled, printed horizontally: consecutive numbers 1 ... 10, 11 ... 20, etc. up to 91 ... 100, mounting type: snapped, for terminal block width: 3.5 mm, lettering field size: 5.15 x 3.5 mm, Number of individual labels: 10

ZBF 3,5,QR:FORTL.ZAHLEN - Zack Marker strip, flat

0801407

https://www.phoenixcontact.com/us/products/0801407

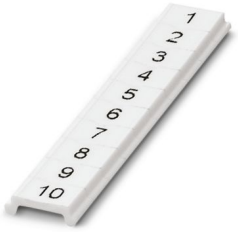

Zack Marker strip, flat, Strip, white, labeled, Printed vertically: consecutive numbers 1 ... 10, 11 ... 20, etc. up to 91 ... 100, mounting type: snapped, for terminal block width: 3.5 mm, lettering field size: 5.15 x 3.5 mm, Number of individual labels: 10

UCT-TMF 3,5 - Marker for terminal blocks

0829486

https://www.phoenixcontact.com/us/products/0829486



Marker for terminal blocks, Sheet, white, unlabeled, can be labeled with: TOPMARK NEO, TOPMARK LASER, BLUEMARK ID COLOR, BLUEMARK ID, BLUEMARK CLED, THERMOMARK PRIME, THERMOMARK CARD 2.0, THERMOMARK CARD, mounting type: snapped, for terminal block width: 3.5 mm, lettering field size: 2.7 x 4.7 mm, Number of individual labels: 108

UCT-TMF 3,5 CUS - Marker for terminal blocks

0829644

https://www.phoenixcontact.com/us/products/0829644



Marker for terminal blocks, can be ordered: by sheet, white, labeled according to customer specifications, mounting type: snap into flat marker groove, for terminal block width: 3.5 mm, lettering field size: 2.7 x 4.7 mm, Number of individual labels: 108

MPS-MT - Test plug

0201744

https://www.phoenixcontact.com/us/products/0201744



Test plug, with solder connection up to 1 mm^2 conductor cross section, number of positions: 1, color: gray

MPS-IH WH - Insulating sleeve

0201663

https://www.phoenixcontact.com/us/products/0201663

Insulating sleeve, color: white



MPS-IH RD - Insulating sleeve

0201676

https://www.phoenixcontact.com/us/products/0201676

Insulating sleeve, color: red



MPS-IH BU - Insulating sleeve

0201689

https://www.phoenixcontact.com/us/products/0201689

Insulating sleeve, color: blue

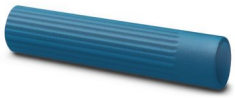

MPS-IH YE - Insulating sleeve

0201692

https://www.phoenixcontact.com/us/products/0201692

Insulating sleeve, color: yellow



MPS-IH GN - Insulating sleeve

0201702

https://www.phoenixcontact.com/us/products/0201702

Insulating sleeve, color: green



MPS-IH GY - Insulating sleeve

0201728

https://www.phoenixcontact.com/us/products/0201728

Insulating sleeve, color: gray



MPS-IH BK - Insulating sleeve

0201731

https://www.phoenixcontact.com/us/products/0201731

Insulating sleeve, color: black



PZ 1,5/S/2 - Strain relief

3212918

https://www.phoenixcontact.com/us/products/3212918



Strain relief, width: 6.8 mm, height: 44.5 mm, number of positions: 2, color: black

SZF 0-0,4X2,5 - Screwdriver

1204504

https://www.phoenixcontact.com/us/products/1204504



Actuation tool, for ST terminal blocks, also suitable for use as a bladed screwdriver, size: 0.4 x 2.5 x 75 mm, 2-component grip, with non-slip grip

ST-BW 0 - Actuation tool

1200135

https://www.phoenixcontact.com/us/products/1200135



Actuation tool, for all 1.5 mm^2 spring cages from PT 1,5/S and FT 1,5/S

Phoenix Contact 2024 © - all rights reserved
https://www.phoenixcontact.com

Phoenix Contact USA
586 Fulling Mill Road
Middletown, PA 17057, United States
(+717) 944-1300
info@phoenixcon.com