Connector Location A

Connector Location B

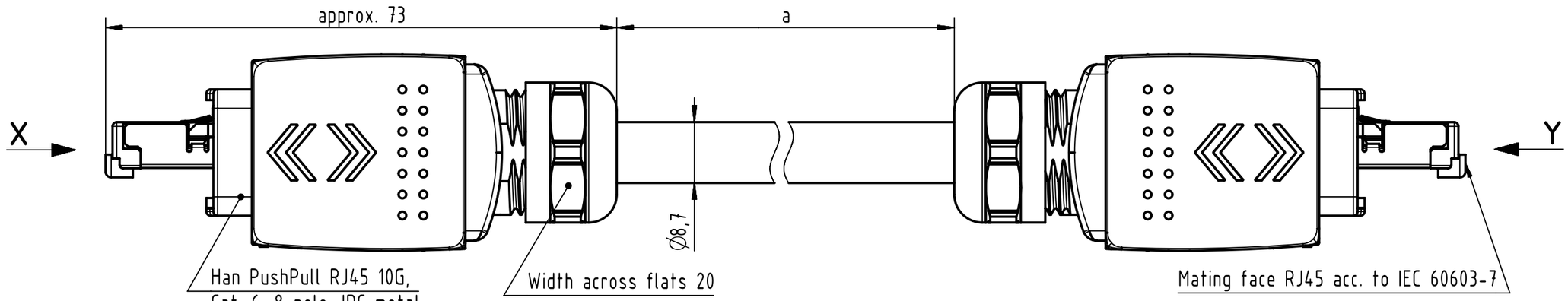

X
male

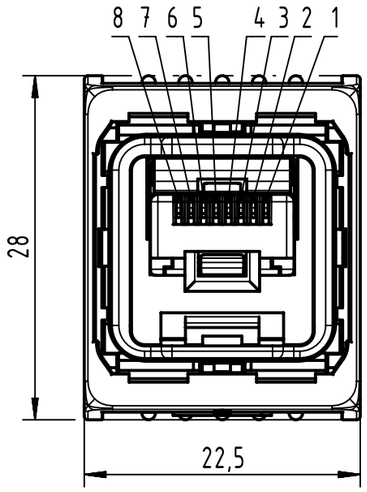

Loading Plan
acc. to TIA/EIA 568B

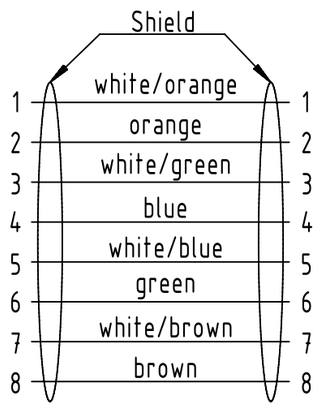

Y
male

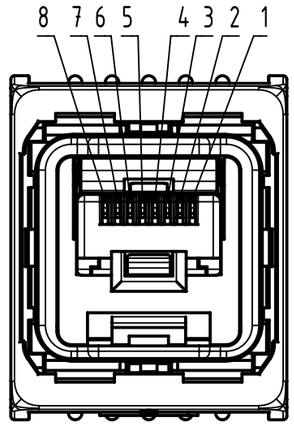

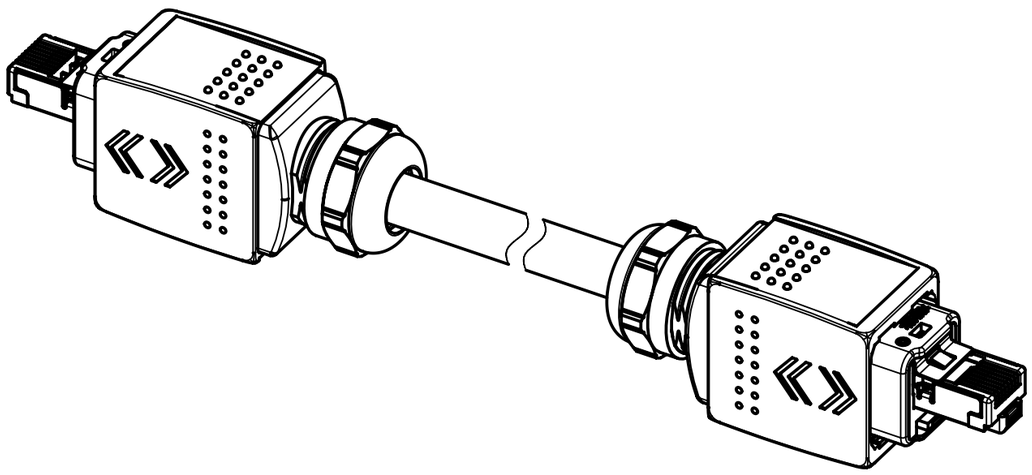

- Protection level: IP65/67
- Temperature range: -40°C ... +70°C

length in "1m" step		
	100	XXX=000
	99	XXX=990
	. . .	. . .
	12	XXX=120
	11	XXX=110
length in "0.1m" step	10	XXX=100
	9.9	XXX=099
	9.8	XXX=098
	. . .	. . .
	0.5	XXX=005
	0.4	XXX=004
	0.3	XXX=003
	0.2	XXX=002
Step	**a [m]**	**XXX**

a [m]	**Tolerance**
6.0 to 100	±1%
0.6 to 5.9	+0.04
0.2 to 0.5	+0.02

PROFINET Typ B Cat.6A 4x2xAWG 23/7 PVC green	09481717165XXX
Type of cable	**Part no.**

All Dimensions in mm	Tech. Character.	Free size tol.			According to production drawing
All rights reserved	Created by STOCHECIC Stocheci	Inspected by BANCIUD Banciu	Standardisation MUNTEANV Muntean	Date 2023-09-06	State Final Release
Department HCS - RO	Title PPv14 10G RJ45 PN Type B AWG23/7				Doc-Key / ECM-Nr. 100546053/UGD/002/F 500000249082
HARTING Customised Solutions D-32339 Espelkamp	Type TB	Number 09481717165XXX		Rev. F	Page 1/1

A3