

ARMORIPX™ Family

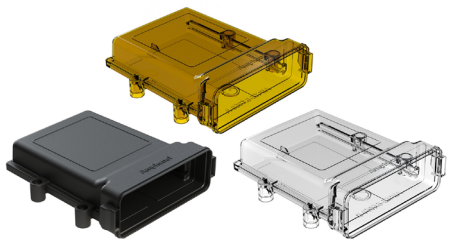

Sealed Enclosures

Amphenol Sine Systems' **Armor IPX™ Family of Sealed Enclosures** provides superior protection for printed circuit boards and electronic control modules in harsh environments and off-road applications. Available in two (2) sizes, as well as three (3) different material types: Ultem® (Amber), Thermoplastic (Black) or Polycarbonate (Clear). Simplified installation is accomplished via a rugged, tandem, through-hole design for ease of mounting and includes optional environmental venting.
The Armor IPX™ electrical interface is established with the compact AT/ATM Header Systems featuring optional keying and sealed 90° molded pins. The snap-in headers quickly and securely attach to the Armor IPX™ enclosure and mate with standard AT/ATM Series plugs. Armor IPX™ Sealed Enclosures and AT/ATM Header Systems are compatible with industry standard EEC enclosures.

Key Features

- Available in Standard and Large sizes
- Available in Ultem® (Amber), Thermoplastic (Black) or Polycarbonate (Clear)
- Rugged, tandem, through-hole design for ease of mounting
- Cross-hatch design increases venting protection
- Snap-in headers establish ease of interface with PCB
- Optional header configurations
  - AT Series™ 12, 24, 36, 48 I/O (A, B, C & D Keying)
  - ATM Series™ 12, 24 I/O (A, B, C & D Keying)
- Enclosures are resistant to most external fluids used in industrial applications

IP67 IP69K

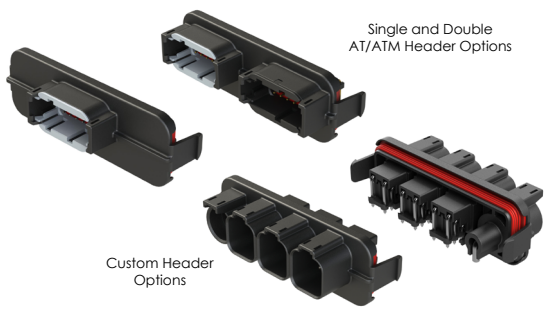

Available Options

- **Custom/Blank Headers** - available to assist in establishing additional connector interface flexibility.
- **Vented Enclosures** - allow for atmospheric pressure differentials (+ or -), due to heat (sun load, board heat, etc.), which help alleviate seal leakage under extreme conditions. For environments requiring 'clean' venting, customers often purchase venting patches which keep out oils and moisture. (The circular flat area inside the enclosure is made to accommodate these patches.)

Technical Specifications

Temperature Range (Enclosures)	Amber: Ultem® PEI -55°C to +125°C Black: Thermoplastic PA66 -55°C to +125°C Clear: Polycarbonate -55°C to +125°C
Temperature Range (Headers)	AT/ATM Headers: -55°C to +125°C
Temperature (Humidity)	320 Hr
Temperature (Life)	1000 Hr
UV Exposure	500 Hr
Max. Current (AMP)	13A (AT Headers); 7.5A (ATM Headers)
IP Ratings (in mated condition)	IP67 and IP69K (w/ Header Installed)
Contact Resistance	<6mΩ (AT Headers); <11mΩ (ATM Headers)
Insulation Resistance	>1000MΩ @ 25°C (AT/ATM Headers)
Current Cycling	500 Hour (AT/ATM Headers)

Enclosure Material	Amber: Ultem® PEI Black: Thermoplastic PA66 Clear: Polycarbonate
Header Material	Thermoplastic PA66
Salt Fog	96 Hr
Vibration	10 to 2000Hz – 20g peak level – XYZ – 24 Hr
Shock	50g - 20 pulses
Pins	Copper Alloy w Tin or Gold Plating (AT Headers) Brass, Post Tin or Gold Plated (ATM Headers)
Sealing Material	Silicone Rubber (AT/ATM Headers)
RoHS	Compliant

IP Ratings
IP67 rated (1M of Water for 30 Minutes, in mated condition)
IP69K rated (High-Pressure Waterproof, 4 Points (0°, 30°, 60°, 90°), in mated condition)

A ASeries™ Family



Standard products. Custom solutions
Customer Service +1 800 394 7732

Armor IPX Series™ Enclosures

Image	Part Number	Description	Amp	Volt
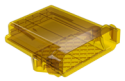	AIPXE-325X4A-E016	Standard, Ultem® (Amber) Enclosure, Vent Hole, Armor IPX™, Temp. Range: -55°C to +125°C	-	-
	AIPXE-325X4B-E016	Standard, Ultem® (Amber) Enclosure, w/out Vent Hole, Armor IPX™, Temp. Range: -55°C to +125°C	-	-
	AIPXE-5X650A-E016	Large, Ultem® (Amber) Enclosure, Vent Hole, Armor IPX™, Temp. Range: -55°C to +125°C	-	-
	AIPXE-5X650B-E016	Large, Ultem® (Amber) Enclosure, w/out Vent Hole, Armor IPX™, Temp. Range: -55°C to +125°C	-	-
	AIPXE-325X4A	Standard, Thermoplastic (Black) Enclosure, Vent Hole, Armor IPX™, Temp. Range: -55°C to +125°C	-	-
	AIPXE-325X4B	Standard, Thermoplastic (Black) Enclosure, w/out Vent Hole, Armor IPX™, Temp. Range: -55°C to +125°C	-	-
	AIPXE-5X650A	Large, Thermoplastic (Black) Enclosure, Vent Hole, Armor IPX™, Temp. Range: -55°C to +125°C	-	-
	AIPXE-5X650B	Large, Thermoplastic (Black) Enclosure, w/out Vent Hole, Armor IPX™, Temp. Range: -55°C to +125°C	-	-
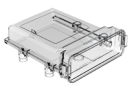	AIPXE-325X4A-E017	Standard, Polycarbonate (Clear) Enclosure, Vent Hole, Armor IPX™, Temp. Range: -55°C to +125°C	-	-
	AIPXE-325X4B-E017	Standard, Polycarbonate (Clear) Enclosure, w/out Vent Hole, Armor IPX™, Temp. Range: -55°C to +125°C	-	-
	AIPXE-5X650A-E017	Large, Polycarbonate (Clear) Enclosure, Vent Hole, Armor IPX™, Temp. Range: -55°C to +125°C	-	-
	AIPXE-5X650B-E017	Large, Polycarbonate (Clear) Enclosure, w/out Vent Hole, Armor IPX™, Temp. Range: -55°C to +125°C	-	-

Armor IPX Series™ Headers

	AT13-12PA-R015	Large, AT Header, Black Thermoplastic, Armor IPX™, 1x12 Position, Size 16, A Key - Tin Plating	13A	250V
	AT13-24PAB-BM03	Large, AT Header, Black Thermoplastic, Armor IPX™, 2x12 Position, Size 16, AB Key - Tin Plating	13A	250V
	AT13-36PABC-BM03	Large, AT Header, Black Thermoplastic, Armor IPX™, 3x12 Position, Size 16, ABC Key - Tin Plating	13A	250V
	AT13-48PABCD-BM03	Large, AT Header, Black Thermoplastic, Armor IPX™, 4x12 Position, Size 16, ABCD Key - Tin Plating	13A	250V
	AT13-12PA-GR02	Large, AT Header, Black Thermoplastic, Armor IPX™, 1x12 Position, Size 16, A Key - Gold Plating	13A	250V
	AT13-24PAB-BM01	Large, AT Header, Black Thermoplastic, Armor IPX™, 2x12 Position, Size 16, AB Key - Gold Plating	13A	250V
	AT13-36PABC-BM01	Large, AT Header, Black Thermoplastic, Armor IPX™, 3x12 Position, Size 16, ABC Key - Gold Plating	13A	250V
	AT13-48PABCD-BM01	Large, AT Header, Black Thermoplastic, Armor IPX™, 4x12 Position, Size 16, ABCD Key - Gold Plating	13A	250V
	ATM13-12PA-GR01	Standard, ATM Header, Black Thermoplastic, Armor IPX™, 1x12 Position, Size 20, A Key - Gold Plating	7.5A	250V
	ATM13-12PB-GR01	Standard, ATM Header, Black Thermoplastic, Armor IPX™, 1x12 Position, Size 20, B Key - Gold Plating	7.5A	250V
	ATM13-12PC-GR01	Standard, ATM Header, Black Thermoplastic, Armor IPX™, 1x12 Position, Size 20, C Key - Gold Plating	7.5A	250V
	ATM13-12PD-GR01	Standard, ATM Header, Black Thermoplastic, Armor IPX™, 1x12 Position, Size 20, D Key - Gold Plating	7.5A	250V
	ATM13-12PA-R008	Standard, ATM Header, Black Thermoplastic, Armor IPX™, 1x12 Position, Size 20, A Key - Tin Plating	7.5A	250V
	ATM13-12PB-R008	Standard, ATM Header, Black Thermoplastic, Armor IPX™, 1x12 Position, Size 20, B Key - Tin Plating	7.5A	250V
	ATM13-12PC-R008	Standard, ATM Header, Black Thermoplastic, Armor IPX™, 1x12 Position, Size 20, C Key - Tin Plating	7.5A	250V
	ATM13-12PD-R008	Standard, ATM Header, Black Thermoplastic, Armor IPX™, 1x12 Position, Size 20, D Key - Tin Plating	7.5A	250V
	ATM13-12PA-12PB-BM01	Standard, ATM Header, Black Thermoplastic, Armor IPX™, 2x12 Position, Size 20, A&B Key - Gold Plating	7.5A	250V
	ATM13-12PA-12PC-BM01	Standard, ATM Header, Black Thermoplastic, Armor IPX™, 2x12 Position, Size 20, A&C Key - Gold Plating	7.5A	250V
	ATM13-12PA-12PD-BM01	Standard, ATM Header, Black Thermoplastic, Armor IPX™, 2x12 Position, Size 20, A&D Key - Gold Plating	7.5A	250V
	ATM13-12PB-12PC-BM01	Standard, ATM Header, Black Thermoplastic, Armor IPX™, 2x12 Position, Size 20, B&C Key - Gold Plating	7.5A	250V
	ATM13-12PB-12PD-BM01	Standard, ATM Header, Black Thermoplastic, Armor IPX™, 2x12 Position, Size 20, B&D Key - Gold Plating	7.5A	250V
	ATM13-12PC-12PD-BM01	Standard, ATM Header, Black Thermoplastic, Armor IPX™, 2x12 Position, Size 20, C&D Key - Gold Plating	7.5A	250V
	ATM13-12PA-12PB-BM03	Standard, ATM Header, Black Thermoplastic, Armor IPX™, 2x12 Position, Size 20, A&B Key - Tin Plating	7.5A	250V
	ATM13-12PA-12PC-BM03	Standard, ATM Header, Black Thermoplastic, Armor IPX™, 2x12 Position, Size 20, A&C Key - Tin Plating	7.5A	250V
	ATM13-12PA-12PD-BM03	Standard, ATM Header, Black Thermoplastic, Armor IPX™, 2x12 Position, Size 20, A&D Key - Tin Plating	7.5A	250V
	ATM13-12PB-12PC-BM03	Standard, ATM Header, Black Thermoplastic, Armor IPX™, 2x12 Position, Size 20, B&C Key - Tin Plating	7.5A	250V
	ATM13-12PB-12PD-BM03	Standard, ATM Header, Black Thermoplastic, Armor IPX™, 2x12 Position, Size 20, B&D Key - Tin Plating	7.5A	250V
	ATM13-12PC-12PD-BM03	Standard, ATM Header, Black Thermoplastic, Armor IPX™, 2x12 Position, Size 20, C&D Key - Tin Plating	7.5A	250V
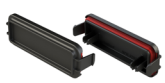	AIPXE-325XBP-01	Standard, Blank Header Plate, Black Thermoplastic, Armor IPX™	-	-
	AIPXE-5X650BP-01	Large, Blank Header Plate, Black Thermoplastic, Armor IPX™	-	-

Standard ArmorIPX™ Enclosure Dimensions (mm)

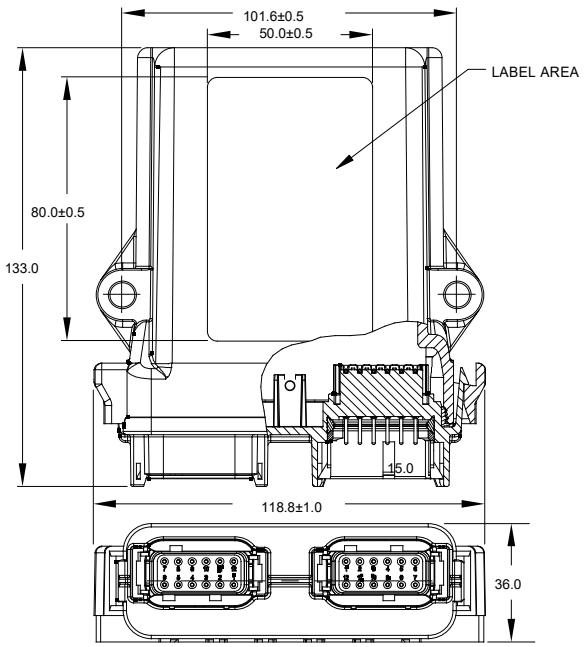

ILLUSTRATIONS SHOWN FOR REFERENCE ONLY.
SEE ACTUAL DATASHEET FOR SPECIFIC DIMENSIONS.

Large ArmorIPX™ Enclosure Dimensions (mm)

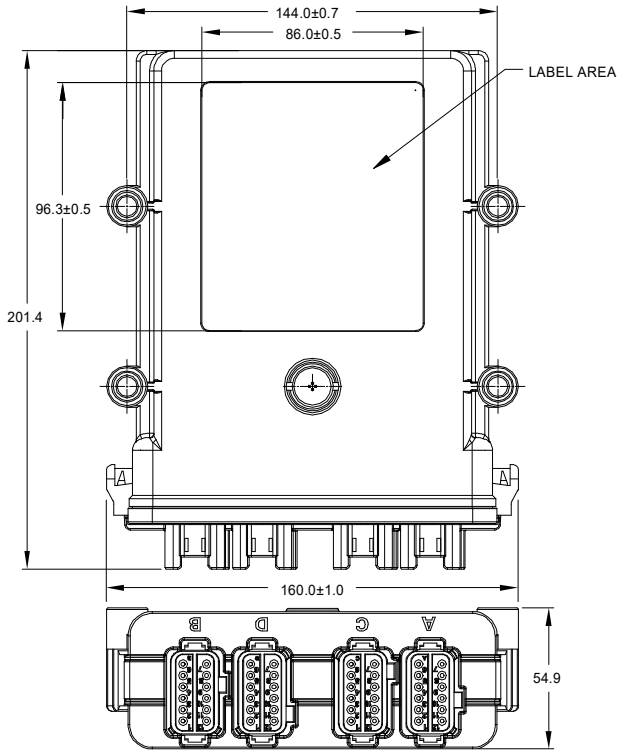

ILLUSTRATIONS SHOWN FOR REFERENCE ONLY.
SEE ACTUAL DATASHEET FOR SPECIFIC DIMENSIONS.

Standard AT Series™ Dimensions (mm)

Receptacle **Plug**

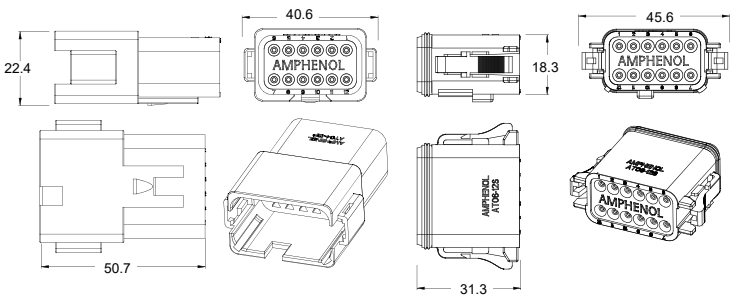

Standard ATM Series™ Dimensions (mm)

Receptacle **Plug**

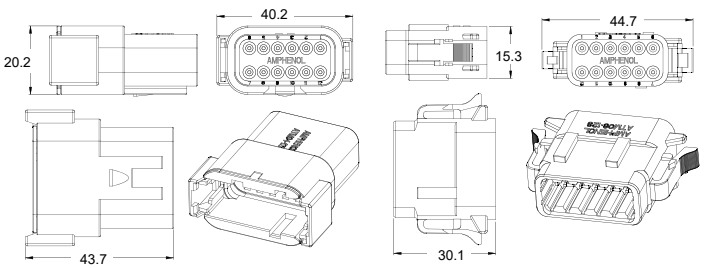

Standard AT Series™ Keying Layouts

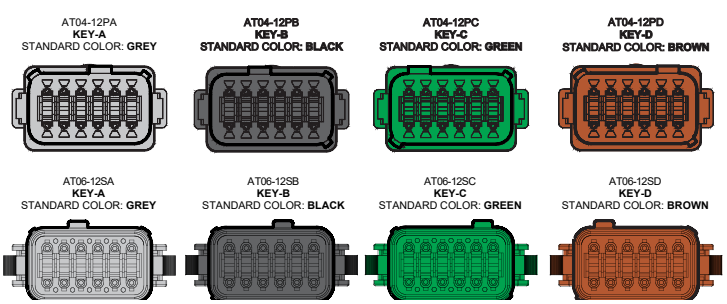

Standard ATM Series™ Keying Layouts

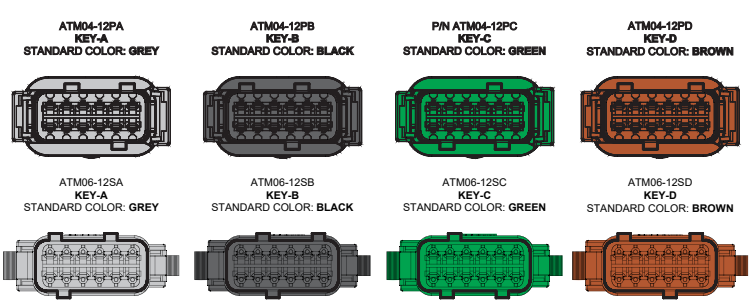

© 2019 Amphenol Sine Systems Corporation, 44274 Morley Drive, Clinton Twp MI 48036 USA +1 800 394 7732 www.amphenol-sine.com csr@amphenol-sine.com
Every effort has been made to ensure that the information contained in this document is accurate at the time of publication. Specifications or information stated in this document are subject to change without notice.