MIKROELEKTRONIKA D.O.O, Batajnički drum 23, 11000 Belgrade, Serbia
VAT: SR105917343 Registration No. 20490918
Phone: + 381 11 78 57 600 Fax: + 381 11 63 09 644 E-mail: office@mikroe.com
www.mikroe.com

AudioAMP 11 Click





PID: MIKROE-5584

AudioAMP 11 Click is a compact add-on board reproducing input audio signals with desired volume and power levels at sound-producing output elements. This board features the NAU8224, a high-performance stereo Class-D audio amplifier from Nuvoton Technology. This flexible I2C configurable audio amplifier can drive a 4Ω load with up to 3.1W output power. In addition to the possibility of digital control (using only one enable pin), the NAU8224 also has many useful gain settings from 6dB to 24dB. Besides, it is equipped with protection features, allowing a reliable operation. This Click board™ is suited for various types of consumer audio equipment applications.

AudioAMP 11 Click is supported by a mikroSDK compliant library, which includes functions that simplify software development. This Click board™ comes as a fully tested product, ready to be used on a system equipped with the mikroBUS™ socket.

How does it work?

AudioAMP 11 Click is based on the NAU8224, a stereo Class-D audio amplifier from Nuvoton Technology. Besides an excellent quantity performance, such as high efficiency, the NAU8224 is also characterized by high output power and low quiescent current. It can drive a 4Ω load with up to 3.1W output power. This audio amplifier is designed to reduce high-frequency emissions with the ferrite bead filters on its outputs (speaker channels). The ferrite beads have a low impedance in the audio range, and because of that, they act as a pass-through filter in the audio frequency range. Furthermore, the NAU8224 has several protection features like thermal overload, short circuit, and supply under-voltage protection allowing a reliable operation.

Mikroe produces entire development toolchains for all major microcontroller architectures.
Committed to excellency, we are dedicated to helping engineers bring the project development up to speed and achieve outstanding results.

ISO 27001: 2013 certification of informational security management system.
ISO 14001: 2015 certification of environmental management system.
OHSAS 18001: 2008 certification of occupational health and safety management system.

ISO 9001: 2015 certification of quality management system (QMS).

MIKROELEKTRONIKA D.O.O, Batajnički drum 23, 11000 Belgrade, Serbia
VAT: SR105917343 Registration No. 20490918
Phone: + 381 11 78 57 600 Fax: + 381 11 63 09 644 E-mail: office@mikroe.com
www.mikroe.com

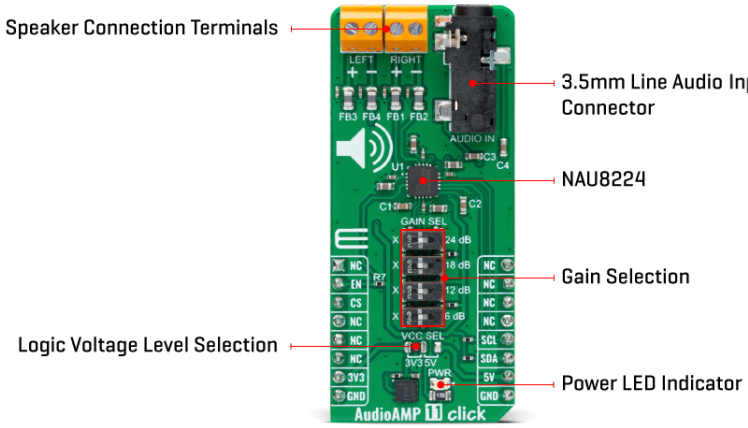

This Click board™ communicates with MCU using the standard I2C 2-Wire interface to read data and configure settings, supporting a Fast Mode operation up to 400kHz. The NAU8224 can be enabled or disabled using the EN pin of the mikroBUS™ socket, offering a switch operation to turn ON/OFF the audio amplifier. In addition to its possible digital control, the NAU8224 also has several gain settings, such as 6dB, 12dB, 18dB, and 24dB, selectable via onboard switches labeled as GAIN SEL. This audio amplifier also provides register-programmable volume control next to the hardware gain selection.

This Click board™ can operate with either 3.3V or 5V logic voltage levels selected via the VCC SEL jumper. This way, both 3.3V and 5V capable MCUs can use the communication lines properly. However, the Click board™ comes equipped with a library containing easy-to-use functions and an example code that can be used, as a reference, for further development.

Specifications

Type	Amplifier
Applications	Can be used for various types of consumer audio equipment applications such as personal media players, portable MP3 players, and more
On-board modules	NAU8224 - audio amplifier from Nuvoton Technology
Key Features	Powerful stereo audio amplifier, Class-D, selectable gain and volume, 4Ω load drive, high efficiency and performance, I2C interface, low power consumption, click-and-pop suppression, Shutdown mode, and more
Interface	I2C
ClickID	Yes
Compatibility	mikroBUS™
Click board size	L (57.15 x 25.4 mm)
Input Voltage	3.3V or 5V

Mikroe produces entire development toolchains for all major microcontroller architectures.
Committed to excellency, we are dedicated to helping engineers bring the project development up to speed and achieve outstanding results.

ISO 27001: 2013 certification of informational security management system.
ISO 14001: 2015 certification of environmental management system.
OHSAS 18001: 2008 certification of occupational health and safety management system.

ISO 9001: 2015 certification of quality management system (QMS).

MIKROELEKTRONIKA D.O.O, Batajnički drum 23, 11000 Belgrade, Serbia
VAT: SR105917343 Registration No. 20490918
Phone: + 381 11 78 57 600 Fax: + 381 11 63 09 644 E-mail: office@mikroe.com
www.mikroe.com

Pinout diagram

This table shows how the pinout on AudioAMP 11 Click corresponds to the pinout on the mikroBUS™ socket (the latter shown in the two middle columns).

Notes	Pin	mikroBUS				Pin	Notes
	NC	1	AN	PWM	16	NC	
Enable	**EN**	2	RST	INT	15	NC	
	NC	3	CS	RX	14	NC	
	NC	4	SCK	TX	13	NC	
	NC	5	MISO	SCL	12	**SCL**	I2C Clock
	NC	6	MOSI	SDA	11	**SDA**	I2C Data
Power Supply	**3.3V**	7	3.3V	5V	10	**5V**	Power Supply
Ground	**GND**	8	GND	GND	9	**GND**	Ground

Onboard settings and indicators

Label	Name	Default	Description
LD1	PWR	-	Power LED Indicator
JP1	VCC SEL	Left	Logic Level Voltage Selection 3V3/5V: Left position 3V3, Right position 5V
SW1	GAIN SEL	Left	24dB Gain Selection
SW2	GAIN SEL	Left	18dB Gain Selection
SW3	GAIN SEL	Left	12dB Gain Selection
SW4	GAIN SEL	Left	6dB Gain Selection

AudioAMP 11 Click electrical specifications

Description	Min	Typ	Max	Unit
Supply Voltage	3.3	-	5	V
Load Impedance	-	4	-	Ω
Output Power	-	-	3.1	W

Software Support

We provide a library for the AudioAMP 11 Click as well as a demo application (example), developed using Mikroe compilers. The demo can run on all the main Mikroe development boards.

Package can be downloaded/installed directly from NECTO Studio Package Manager (recommended), downloaded from our LibStock™ or found on Mikroe github account.

Library Description

This library contains API for AudioAMP 11 Click driver.

Key functions

- audioamp11_enable_device AudioAMP 11 enable device function.

Mikroe produces entire development toolchains for all major microcontroller architectures.
Committed to excellency, we are dedicated to helping engineers bring the project development up to speed and achieve outstanding results.

ISOQAR REGISTERED
UKAS MANAGEMENT SYSTEMS
ISO 27001: 2013 certification of informational security management system.
ISO 14001: 2015 certification of environmental management system.
OHSAS 18001: 2008 certification of occupational health and safety management system.
TÜV SÜD ISO 9001
ISO 9001: 2015 certification of quality management system (QMS).

MIKROELEKTRONIKA D.O.O, Batajnički drum 23, 11000 Belgrade, Serbia
VAT: SR105917343 Registration No. 20490918
Phone: + 381 11 78 57 600 Fax: + 381 11 63 09 644 E-mail: office@mikroe.com
www.mikroe.com

- audioamp11_check_gain AudioAMP 11 check gain function.
- audioamp11_set_output_volume_level AudioAMP 11 set output volume level function.

Example Description

This library contains API for the AudioAMP 11 click driver. This demo application shows use of a AudioAMP 11 Click board™.

The complete application code, and ready-to-use projects can be installed directly from NECTO Studio Package Manager (recommended), downloaded from our LibStock™ or found on Mikroe github account.

Other Mikroe Libraries used in the example:

- MikroSDK.Board
- MikroSDK.Log
- Click.AudioAMP11

Additional notes and informations

Depending on the development board you are using, you may need USB UART click, USB UART 2 Click or RS232 Click to connect to your PC, for development systems with no UART to USB interface available on the board. A UART terminal is available in all Mikroe compilers.

mikroSDK

This Click board™ is supported with mikroSDK - Mikroe Software Development Kit, which needs to be downloaded from the LibStock and installed for the compiler you are using to ensure proper operation of mikroSDK compliant Click board™ demo applications.

For more information about mikroSDK, visit the official page.

Resources

mikroBUS™

mikroSDK

Click board™ Catalog

Click boards™

ClickID

Downloads

AudioAmp 11 click example on Libstock

AudioAmp 11 click schematic

NAU8224 datasheet

Mikroe produces entire development toolchains for all major microcontroller architectures.
Committed to excellency, we are dedicated to helping engineers bring the project development up to speed and achieve outstanding results.

ISO 27001: 2013 certification of informational security management system.
ISO 14001: 2015 certification of environmental management system.
OHSAS 18001: 2008 certification of occupational health and safety management system.

ISO 9001: 2015 certification of quality management system (QMS).

MIKROELEKTRONIKA D.O.O, Batajnički drum 23, 11000 Belgrade, Serbia
VAT: SR105917343 Registration No. 20490918
Phone: + 381 11 78 57 600 Fax: + 381 11 63 09 644 E-mail: office@mikroe.com
www.mikroe.com

[AudioAmp 11 click 2D and 3D files]

Mikroe produces entire development toolchains for all major microcontroller architectures.
Committed to excellency, we are dedicated to helping engineers bring the project development up to speed and achieve outstanding results.

ISO 27001: 2013 certification of informational security management system.
ISO 14001: 2015 certification of environmental management system.
OHSAS 18001: 2008 certification of occupational health and safety management system.

ISO 9001: 2015 certification of quality management system (QMS).