CAPAROC E2 12-24DC/1-4A EX - Electronic circuit breaker

1344361

https://www.phoenixcontact.com/us/products/1344361

Please be informed that the data shown in this PDF document is generated from our online catalog. Please find the complete data in the user documentation. Our general terms of use for downloads are valid.



2-channel electronic circuit breaker module for protecting 12 V DC and 24 V DC loads against overload and short circuit. Nominal current adjustable from 1 A to 4 A via step switch. EX e approval for zone 2. For DIN rail installation via the CAPAROC current rails.

Your advantages

- The customizable standard, thanks to individual combinations of the future-proof modular system
- Easy operation for everyone through tool-free assembly, uninterrupted installation, and transparent operating state
- Strikingly simple design-in with extensive support from the selection up to digital services

Commercial data

Item number	1344361
Packing unit	1 pc
Minimum order quantity	1 pc
Sales key	CL11
Product key	CLA233
GTIN	4063151658113
Weight per piece (including packing)	96.4 g
Weight per piece (excluding packing)	87.6 g
Customs tariff number	85363010
Country of origin	DE

Technical data

Notes

General

Note	LABS release – in accordance with test specification VW PV 3. 10.7:2005-0
	When connecting the conductor, make sure that the CAPAROC modules are not pulled apart due to tensile force. Gaps must not be created between the modules.
	Observe the specified conditions for use in potentially explosive areas. Install the device in a suitable approved housing with at least IP54 degree of protection that meets the requirements of IEC/EN 60079-0. Also observe the requirements of IEC/EN 60079-14.

Product properties

Product type	Device circuit breakers
Product family	CAPAROC
Type	Plug-in module
Number of positions	1
No. of channels	2
Number of slots	2

Insulation characteristics

Protection class	III
Pollution degree	2

Electrical properties

General

Operating voltage	10 V DC ... 30 V DC
Rated voltage	12 V DC
	24 V DC
Rated current I_N	4 A DC (per channel)
Rated current I_N	1 / 2 / 3 / 4 A DC (Adjustable via rotary coding switches)
	1 / 2 / 3 / 4 A DC (can be set, in RC mode via power module with communication interface)
Rated current (pre-adjusted)	1 A
Rated surge voltage	0.5 kV
Tripping method	E (electronic)
Feedback resistance	max. 35 V DC
Switch-on delay	50 ms (each channel preset by default)
	can be adapted with CAPAROC PM IOL and CAPAROC PM PN power modules
Required backup fuse	Only required if I_{max} of the power supply > the short-circuit switching capacity. Integrated failsafe element.
Short-circuit switching capacity	300 A

Dielectric strength	35 V DC (Load circuit)
Active current limitation	typ. 2.0 x I_N at $I_N \leq 3$ A
	typ. 1.5 x I_N at $I_N = 4$ A
Fuse	electronic
Efficiency	> 99 %
Closed circuit current I_0	typ. 25 mA (no load at 24 V)
Power dissipation	typ. 0.6 W (no load at 24 V)
	< 1.1 W (in nominal operation at 24 V and 4 A)
Measuring tolerance I	± 10 % (2 A ... 4 A)
	± 20 % (1 A)
MTBF (IEC 61709, SN 29500)	11364927 h (at 25 °C with 21 % load)
	5271554 h (at 40°C with 34.25% load)
	640731 h (at 65°C with 100% load)
Voltage drop	0.06 V (at 4 A)
Fail-safe element	5 A DC (per output channel)
Contact switching type	without electrical isolation

Load circuit

Shutdown time	5 s (with overload 1.1…1.3 x I_N at $I_N \geq 4$ A)
	5 s (for overload 1.1…1.7 x I_N at $I_N < 4$ A)
	≤ 400 ms (max. 450 ms for high starting currents)
	typ. 20 ms (for short circuit > 1,5 x I_N)
Undervoltage switch-off	≤ 8.5 V DC (active)
	≥ 9.2 V DC (inactive)
Overvoltage switch-off	≥ 32.5 V DC (active)
	≤ 30.5 V DC (inactive)
Max. capacitive load	≤ 60000 µF (Depending on the current setting and the short-circuit current available)

Connection data

Fuse-protected output

Connection method	Push-in connection
Stripping length	10 mm
Conductor cross-section flexible	0.2 mm² ... 4 mm²
Conductor cross-section rigid	0.2 mm² ... 4 mm²
Conductor cross-section AWG	24 ... 12
Conductor cross-section, flexible, with ferrule, with plastic sleeve	0.25 mm² ... 4 mm²
Conductor cross-section flexible, with ferrule without plastic sleeve	0.25 mm² ... 4 mm²

Signaling

Channel LED off	off (Channel switched off)
Channel LED yellow	lit (Channel switched on, channel load > 80%)
	two flashes (Check the installation, no communication to power module)

Channel LED green	lit (Channel switched on)
	flashing (Channel switched on, coding switch position is not equal to set value)
Channel LED red	lit (Channel switched off, over- or undervoltage active)
	ON temporarily (Channel switched off, 5 s cool-down phase, overload or short-circuit release)
	flashing (Channel switched off, ready to be switched back on, overload or short-circuit release)
	two flashes (Channel switched off, system total current limit exceeded)
Channel LED red-yellow	flashing (Channel is overloaded and is switched off)
Channel LED red-green	flashing (Channel switched off, programming mode active, current adjustment after overload or short-circuit release)

Dimensions

Dimensional drawing	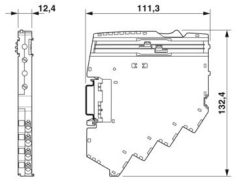
Width	12.4 mm
Height	132.4 mm
Depth	111.3 mm (incl. DIN rail 7.5 mm)

Material specifications

Color	light gray (RAL 7035)
Material	PA 6
	PA 6
	PA 6
	PC
Flammability rating according to UL 94	V-0

Environmental and real-life conditions

Ambient conditions

Degree of protection	IP20
Ambient temperature (operation)	-30 °C ... 65 °C (The temperature range of the power module must be taken into consideration)
Ambient temperature (storage/transport)	-40 °C ... 70 °C
Altitude	≤ 4000 m (amsl)
Humidity test	96 h, 95 % RH, 40 °C
Shock (operation)	30g (11 ms period, half-sine shock pulse, according to IEC 60068-2-27)
	25g (6 ms duration, half-sine shock pulse in accordance with IEC 60068-2-27, continuous shock)
Vibration (operation)	5g (10 Hz ... 150 Hz / 10 cycles / axis / X, Y, Z)

Approvals

UL approval

Identification	UL/C-UL Listed UL 508
	UL Recognized UL 2367
	UL 121201 Class I, Division 2, Groups A, B, C, D, T4A
	NEC Class 2 according to UL 1310

ATEX

Identification	TÜV 22 ATEX 8874 X
	II 3G Ex ec IIC T4 Gc

IECEx

Identification	IECEx TUR 22.0049X
	II 3G Ex ec IIC T4 Gc

UKCA Ex (UKEX)

Identification	TÜV 22 UKEX 7109 X
	II 3G Ex ec IIC T4 Gc

Corrosive gas test

Identification	ISA S71.04.2013 G3 Harsh Group A

Standards and regulations

Standards/specifications	EN 61000-6-2
Note	EMC – Immunity for industrial areas
Standards/specifications	EN 61000-6-3
Note	EMC – Emission for residential, business and commercial properties and small operations
Standards/specifications	EN 60068-2-78
Note	Environmental influences – Moisture and heat, constant
Standards/specifications	EN 50178
Note	Equipping power installations with electronic equipment
Standards/specifications	EN 60068-2-6
Note	Environmental influences – Vibrations (sinusoidal)
Standards/specifications	EN 60068-2-27
Note	Environmental influences – Shocks
Standards/specifications	IEC 60079-7
Note	Explosive atmospheres – Part 7: Equipment protection by increased safety “e”
Standards/specifications	IEC 60079-0
Note	Explosive atmospheres – Part 0: Equipment – General requirements

Mounting

Mounting type	pluggable onto CAPAROC CR… current rail

Drawings

Dimensional drawing

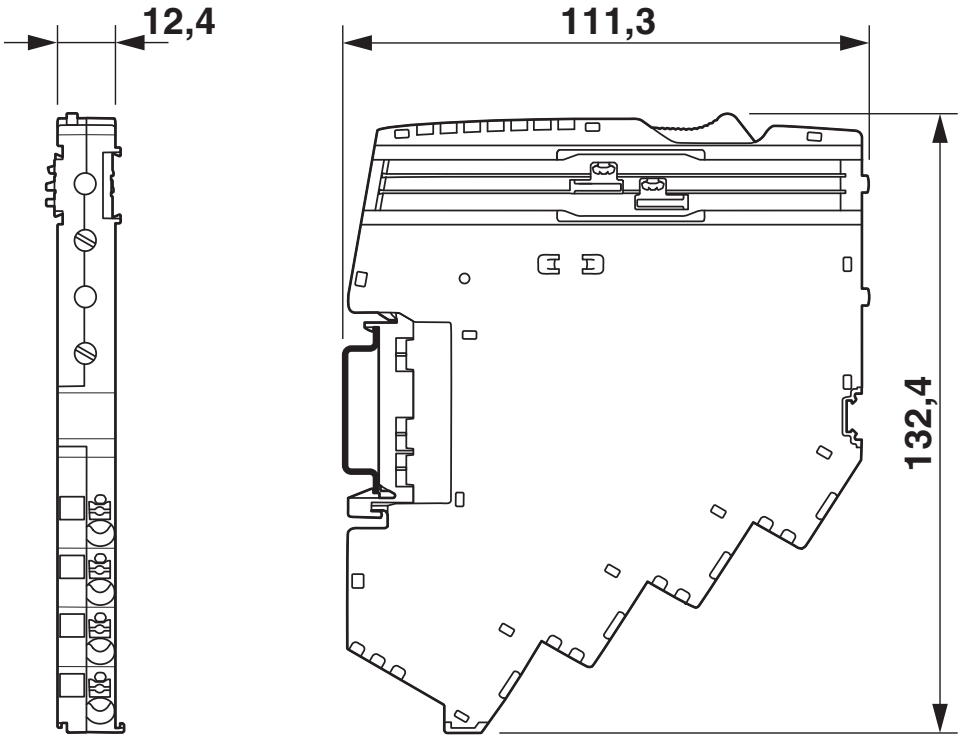

Diagram

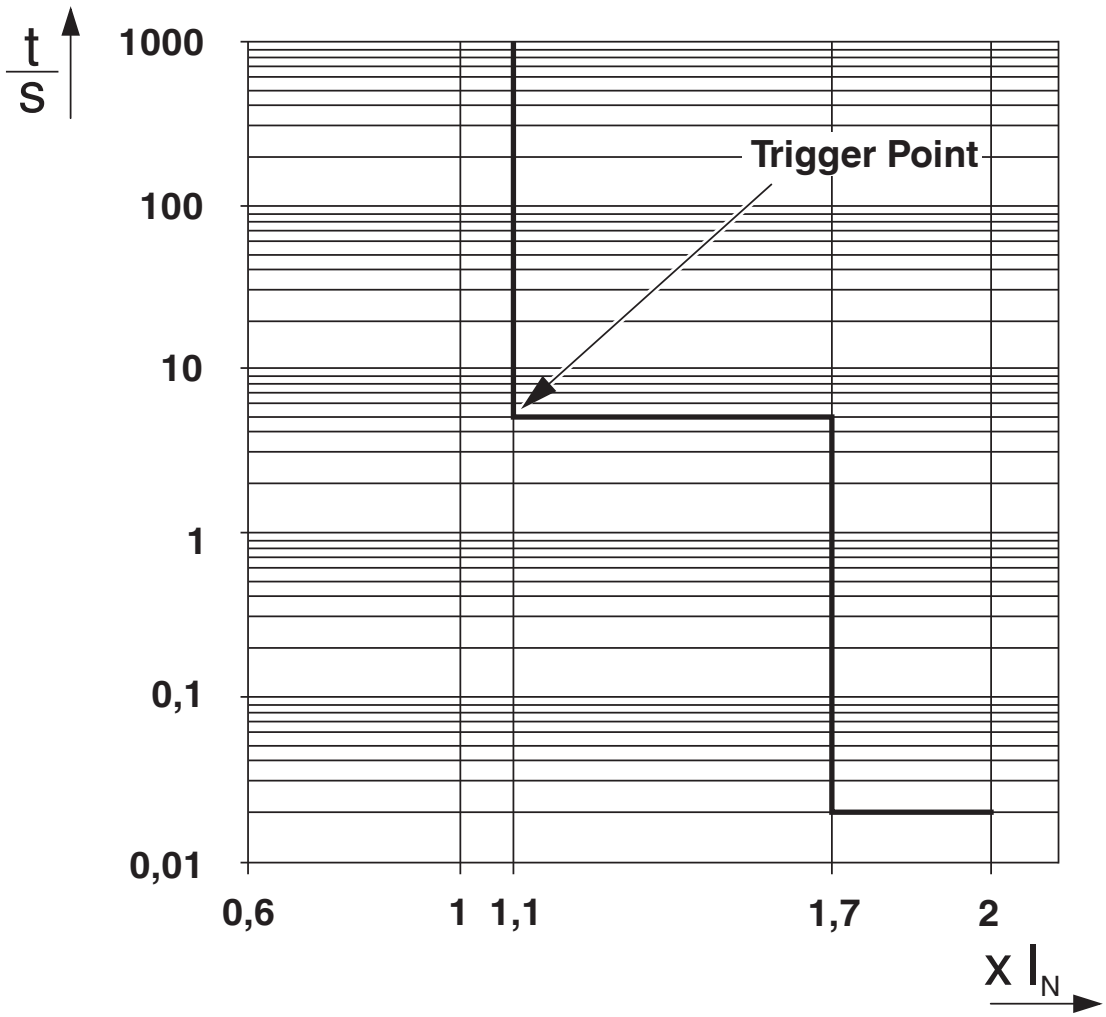

Tripping characteristic < 4 A

Diagram

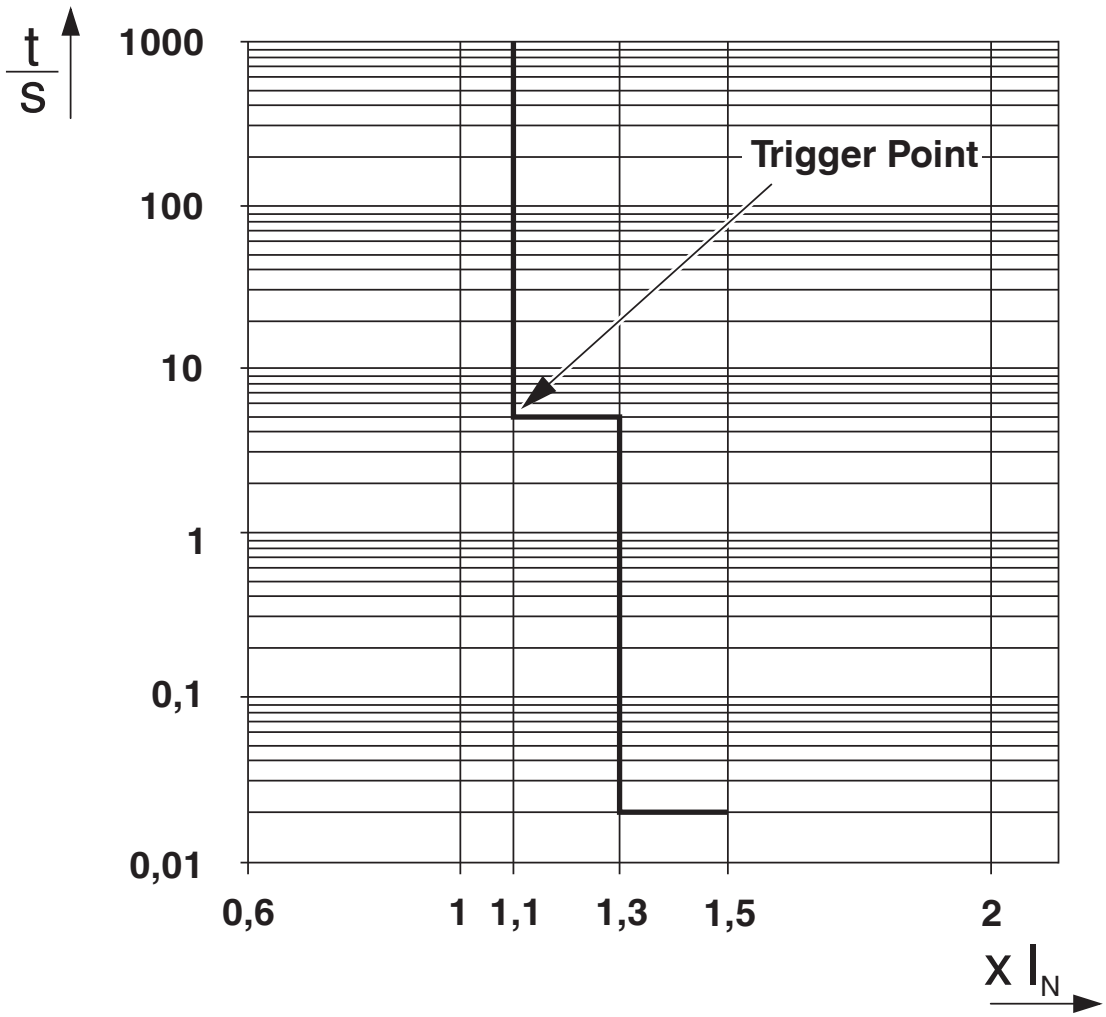

Tripping characteristic 4 A

Diagram

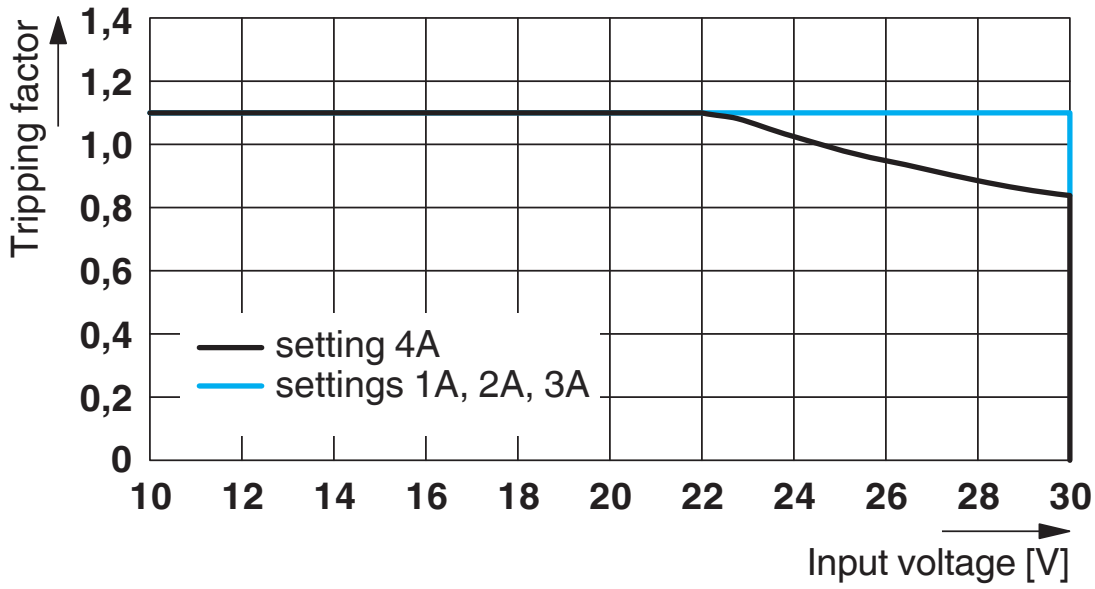

Tripping characteristic according to the input voltage

Block diagram

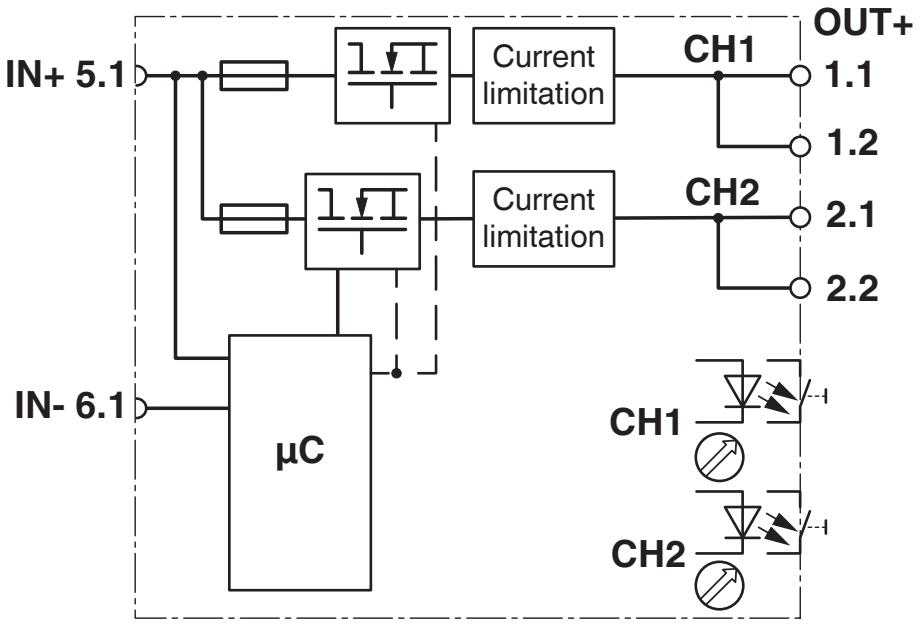

Approvals

To download certificates, visit the product detail page: https://www.phoenixcontact.com/us/products/1344361

UL Recognized
Approval ID: FILE E 317172

UL Listed
Approval ID: E123528

cUL Listed
Approval ID: E123528

IECEx
Approval ID: IECEx TUR 22.0049X

UL Recognized
Approval ID: FILE E 324415

cUL Listed
Approval ID: FILE E 483407

UL Listed
Approval ID: FILE E 483407

ATEX
Approval ID: TÜV 22 ATEX 8874 X

UKCA-EX
Approval ID: TÜV 22 UKEX 7109 X

Classifications

ECLASS

ECLASS-13.0	27140401
ECLASS-15.0	27140401

ETIM

ETIM 9.0	EC003538

Environmental product compliance

EU RoHS

Fulfills EU RoHS substance requirements	Yes
Exemption	7(a), 7(c)-I

China RoHS

Environment friendly use period (EFUP)	EFUP-50
	An article-related China RoHS declaration table can be found in the download area for the respective article under "Manufacturer declaration". For all articles with EFUP-E, no China RoHS declaration table issued and required.

EU REACH SVHC

REACH candidate substance (CAS No.)	Lead(CAS: 7439-92-1)
	2,2',6,6'-tetrabromo-4,4'-isopropylidenediphenol(CAS: 79-94-7)
SCIP	a394d0fd-1c75-4a49-9e07-ab7895f2ade3

Phoenix Contact 2025 © - all rights reserved
https://www.phoenixcontact.com

Phoenix Contact USA
586 Fulling Mill Road
Middletown, PA 17057, United States
(+717) 944-1300
info@phoenixcon.com