Product data sheet

Specifications



Circuit breaker, PowerPacT H, 60A, 2 pole, 600VAC, 18kA, lugs, thermal magnetic, 80%

HGL26060

Product availability: Non-Stock - Not normally stocked in distribution facility

Main

Range	PowerPact
Product name	PowerPact H
Product or Component Type	Circuit breaker
Device Application	Distribution

Complementary

Line Rated Current	60 A
Number of Poles	2P
Protected poles description	2t
Control Type	Toggle
Breaking capacity code	G
Breaking capacity	65 kA 240 V AC 50/60 Hz UL 489 35 kA 480 V AC 50/60 Hz UL 489 18 kA 600 V AC 50/60 Hz UL 489 20 kA 250 V DC UL 489 20 kA 500 V DC UL 489
[Ue] rated operational voltage	690 V AC 50/60 Hz IEC 60947-3
Network Frequency	50/60 Hz
[Ics] rated service breaking capacity	65 kA 220/240 V AC 50/60 Hz IEC 60947-2 35 kA 380/440/415 V AC 50/60 Hz IEC 60947-2 18 kA 500/525 V AC 50/60 Hz IEC 60947-2 20 kA 250 V DC IEC 60947-2 20 kA 500 V DC IEC 60947-2
[Uimp] rated impulse withstand voltage	8 kV IEC 60947-2
Trip unit technology	Thermal-magnetic
Magnetic tripping current	1450 A
Magnetic hold current	800 A
Continuous current rating	80 %
[Ui] rated insulation voltage	750 V IEC 60947-2
Suitability for isolation	Yes IEC 60947-2
Utilisation category	Category A
AWG gauge	AWG 14...AWG 3/0 aluminium/copper terminal
Local signalling	Switched off (OFF) 1 trip indicator green)
Mounting mode	Unit mount lug)
Mounting Support	Lug

Price is “List Price” and may be subject to a trade discount – check with your local distributor or retailer for actual price.

Disclaimer: This documentation is not intended as a substitute for and is not to be used for determining suitability or reliability of these products for specific user applications

Electrical connection	Lugs, line Lugs, load
Terminal identifier	AL150HD
Tightening torque	44.3 lbf.in (5 N.m) 0.004…0.009 in² (2.5…6 mm²) (AWG 14...AWG 10) 123.9 lbf.in (14 N.m) 0.02…0.1 in² (10…95 mm²) (AWG 8...AWG 3/0)
Number of slots	2 auxiliary switch OF plug-in) 1 alarm switch SD plug-in) 1 overcurrent trip switch SDE plug-in) 1 voltage release MN or MX plug-in)
Power wire stripping length	0.6 in (16 mm)
Color	Black
Height	6.4 in (163 mm)
Width	4.09 in (104 mm)
Depth	3.4 in (86 mm)
Net Weight	4.9 lb(US) (2.2 kg)
Quantity per Set	1
Communication interface	Modbus Ethernet
Circuit breaker application	HACR rated

Environment

Quality labels	CE
Standards	UL CSA NEMA NOM-003-SCFI-2000 IEC 60947-2
Product certifications	UL CSA NOM
IP degree of protection	Front cover IP40 IEC 60529
Pollution degree	3 IEC 60947-1
Ambient Air Temperature for Operation	-13…158 °F (-25…70 °C)
Ambient Air Temperature for Storage	-58…185 °F (-50…85 °C)
Operating altitude	< 6561.68 ft (2000 m) without derating 5000 m with derating

Ordering and shipping details

Category	US10DE201115
Discount Schedule	0DE2
GTIN	785901433859
Returnability	Yes
Country of origin	MX

Packing Units

Unit Type of Package 1	PCE
Nbr. of units in pkg.	1
Package 1 Height	5.125 in (13.018 cm)

Package 1 Width	7.250 in (18.415 cm)
Package 1 Length	8.438 in (21.433 cm)
Package weight(Lbs)	3.0005 lb(US) (1.361 kg)

Contractual warranty

Warranty	18 months

Environmental Data

Schneider Electric aims to achieve Net Zero status by 2050 through supply chain partnerships, lower impact materials, and circularity via our ongoing “Use Better, Use Longer, Use Again” campaign to extend product lifetimes and recyclability.

Environmental Data explained >

How we assess product sustainability >

Environmental footprint

Carbon footprint (kg CO2 eq, Total Life cycle)	142
Environmental Disclosure	Product Environmental Profile

Use Better

Materials and Substances

Packaging made with recycled cardboard	Yes
Packaging without single use plastic	No
EU RoHS Directive	Compliant with Exemptions
REACh Regulation	REACh Declaration
California proposition 65	WARNING: This product can expose you to chemicals including: DINP, which is known to the State of California to cause cancer, and DIDP, which is known to the State of California to cause birth defects or other reproductive harm. For more information go to www.P65Warnings.ca.gov
PVC free	Yes

Use Again

Repack and remanufacture

Circularity Profile	End of Life Information
Take-back	No

Technical Illustration

Dimensions

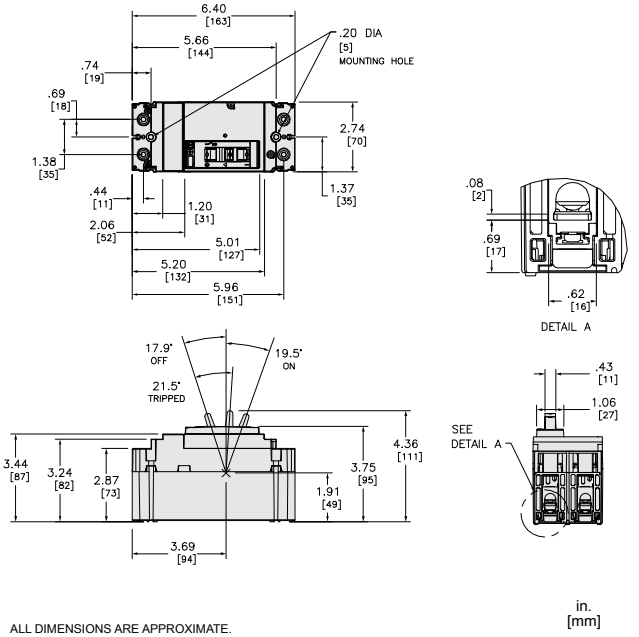

in.
[mm]

ALL DIMENSIONS ARE APPROXIMATE.
ALSO REFER TO CAD, TECHNICAL DRAWINGS, AND DOCUMENTATION