Data sheet

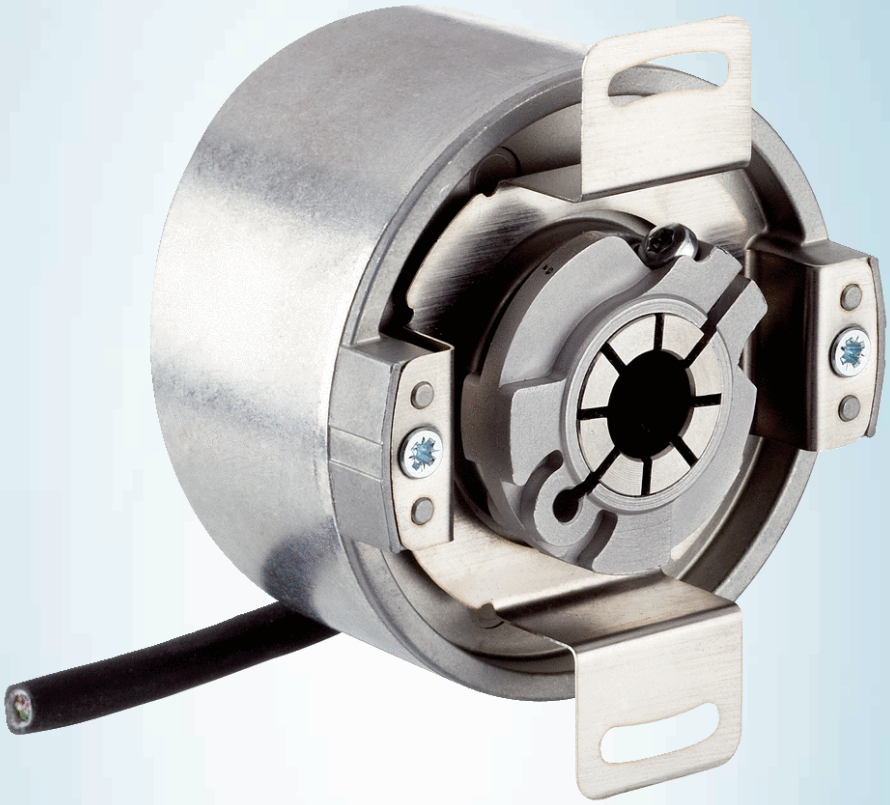

SFM60-H1KB0K02

SFS/SFM60

MOTOR FEEDBACK SYSTEMS

SICK
Sensor Intelligence.



Illustration may differ

Ordering information

Type	part no.
SFM60-H1KB0K02	1081090

Other models and accessories ➜ www.sick.com/SFS_SFM60

Detailed technical data

Features

Items supplied	M3 mounting screws for stator coupling not included with delivery.

Safety-related parameters

$MTTF_D$ (mean time to dangerous failure)	230 years (EN ISO 13849) [1]

[1] This product is a standard product and does not constitute a safety component as defined in the Machinery Directive. Calculation based on nominal load of components, average ambient temperature 60 °C, frequency of use 8760 h/a. All electronic failures are considered hazardous. For more information, see document no. 8015532.

Performance

Sine/cosine periods per revolution	1,024
Number of the absolute ascertainable revolutions	4,096
Total number of steps	134,217,728
Measuring step	0.3 ″ For interpolation of the sine/cosine signals with, e. g., 12 bits
Integral non-linearity	Typ. ± 45 ″, Error limits for evaluating sine/cosine period, without mechanical tension of the stator coupling
Differential non-linearity	± 7 ″, Non-linearity within a sine/cosine period
Operating speed	≤ 6,000 min^{-1}, up to which the absolute position can be reliably produced
Available memory area	1,792 Byte
System accuracy	± 52 ″

Interfaces

Type of code for the absolute value	Binary
Code sequence	Rising, For clockwise shaft rotation, looking in direction “A” (see dimensional drawing)
Communication interface	HIPERFACE®

Electronics

Connection type	Cable, 8-wire (4 x 2 x 0.15 mm^2), radial, 1.5 m
Supply voltage	7 V DC ... 12 V DC

Recommended supply voltage	8 V DC
Current consumption	< 80 mA (without load)
Output frequency for sine/cosine signals	≤ 200 kHz

Mechanics

Shaft version	Blind hollow shaft
Shaft diameter	3/8″
Shaft material	Stainless steel
Flange material	Zinc diecast
Housing material	Aluminum die cast
Flange type / stator coupling	Stator coupling (BEF-DS07XFX)
Dimensions	See dimensional drawing
Weight	≤ 0.25 kg
Moment of inertia of the rotor	40 gcm²
Operating speed	≤ 9,000 min^{-1} [1]
Angular acceleration	≤ 500,000 rad/s²
Operating torque	0.6 Ncm (+20 °C)
Start up torque	+ 0.8 Ncm (+20 °C)
Permissible movement static	± 0.3 mm, ± 0.5 mm radial, axial
Permissible movement dynamic	± 0.1 mm radial ± 0.2 mm axial
Life of ball bearings	3.6 x 10^9 revolutions

[1] Allow for self-heating of 3.3 K per 1,000 rpm when designing the operating temperature range.

Ambient data

Operating temperature range	–40 °C ... +115 °C
Storage temperature range	–40 °C ... +115 °C, without package
Relative humidity/condensation	90 %, Condensation not permitted
Resistance to shocks	100 g, 6 ms (according to EN 60068-2-27)
Frequency range of resistance to vibrations	20 g, 10 Hz ... 2,000 Hz (EN 60068-2-6)
EMC	According to EN 61000-6-2 and EN 61000-6-3 [1]
Enclosure rating	IP65, with mating connector inserted (IEC 60529)

[1] The EMC according to the standards quoted is achieved when the motor feedback system is mounted in an electrically conductive housing, which is connected to the central earthing point of the motor controller via a cable screen. The GND-(0 V) connection of the supply voltage is also grounded here. If other shielding concepts are used, users must perform their own tests.

Certificates

EU declaration of conformity	✓
UK declaration of conformity	✓
ACMA declaration of conformity	✓
Moroccan declaration of conformity	✓
China-RoHS	✓
Information according to Art. 3 of Data Act (Regulation EU 2023/2854)	✓

Classifications

ECLASS 5.0	27270590
ECLASS 5.1.4	27270590
ECLASS 6.0	27270590
ECLASS 6.2	27270590
ECLASS 7.0	27270590
ECLASS 8.0	27270590
ECLASS 8.1	27270590
ECLASS 9.0	27270590
ECLASS 10.0	27273805
ECLASS 11.0	27273901
ECLASS 12.0	27273901
ETIM 5.0	EC001486
ETIM 6.0	EC001486
ETIM 7.0	EC001486
ETIM 8.0	EC001486
UNSPSC 16.0901	41112113

Dimensional drawing Blind hollow shaft, cable - standard system

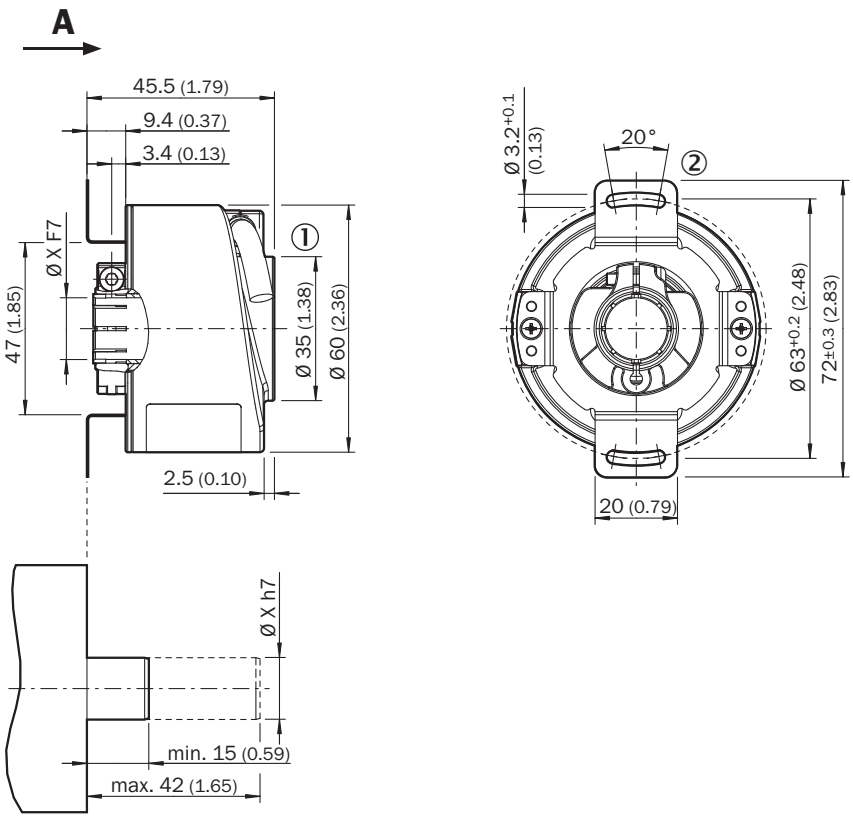

Dimensions in mm (inch)
General tolerances according to DIN ISO 2768-mk

① cable diameter = 5.6 mm +/- 0.2 mm bend radius = 30 mm
② Dimensional drawing of the stator coupling may differ depending on the variant. Please also refer to the dimensional drawing of the stator coupling.

PIN assignment

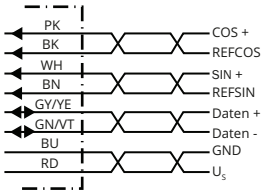

Wire colors (cable connection)	Signal	Explanation
Brown	REFSIN	Process data channel
White	+ SIN	Process data channel
Black	REFCOS	Process data channel
Pink	+ COS	Process data channel
Gray or yellow	Data +	Parameter channel RS 485
Green or purple	Data -	Parameter channel RS 485
Blue	GND	Ground connection
Red	U_S	Supply voltage
Screen	–	Screen connected to encoder housing

Diagrams Signal specification of the process channel

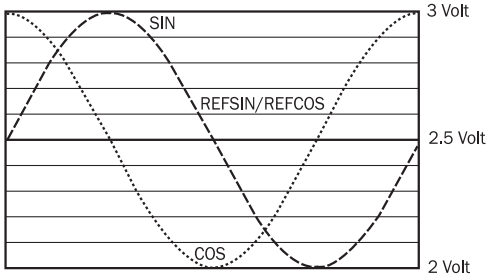

Signal diagram for clockwise rotation of the shaft looking in direction "A" (see dimensional drawing)
1 period = 360 ° : 1024

Operation note Charactersitics applicable to all permissible environmental conditions

Signal	Values/unit
Signal peak, peak V_{SS} of SIN, COS	0.9 V ... 1.1 V
Signal offset REFSIN, REFCOS	2.2 V ... 2.8 V

Operation note Model-specific settings

	SFS	SFM
Model ID (command 52h)	22h	27h
Free E^2PROM [bytes]	128/1.792	128/1.792
Address	40h	40h
Mode_485	E4h	E4h
Codes 0 to 3	55h	55h
Counter	0	0

Operation note Overview of supported commands for HIPERFACE®

			SFS	SFM
Command byte	**Function**	**Code 0** [1]	**Comment**	**Comment**
42h	Read position	■		
43h	Set position			
44h	Read analog value		Channel number 48h	Channel number 48h
			Temperature [°C]	Temperature [°C]
46h	Read counter			
47h	Increase counter			
49h	Delete counter	■		
4Ah	Read data			
4Bh	Store data			
4Ch	Determine status of a data field			
4Dh	Create data field			
4Eh	Determine available memory area			
4Fh	Change access code			
50h	Read encoder status			
52h	Read out type label		Encoder type = 22h	Encoder type = 22h
53h	Encoder reset			
55h	Allocate encoder address	■		
56h	Read serial number and program version			
57h	Configure serial interface	■		

[1] The commands thus marked include the parameter 'Code 0'. Code 0 is a byte inserted into the protocol to provide additional protection of vital system parameters against accidental overwriting. When the device is supplied, 'Code 0' = 55h.

Operation note Overview of status messages for HIPERFACE®

	Status code	Description	SFS	SFM
Error type	00h	The encoder has not detected any faults	■	■
Initialization	01h	Incorrect alignment data	■	■
	02h	Incorrect internal angular offset	■	■
	03h	Data field partitioning table destroyed	■	■
	04h	Analog limit values not available	■	■
	05h	Internal I2C bus inoperative	■	■
	06h	Internal checksum error	■	■
Protocol	07h	Encoder reset occurred as a result of program monitoring	■	■
	09h	Parity error	■	■
	0Ah	Checksum of transmitted data is incorrect	■	■
	0Bh	Unknown command code	■	■
	0Ch	Number of transmitted data is incorrect	■	■
	0Dh	Transmitted command argument is not allowed	■	■
Data	0Eh	The selected data field may not be written to	■	■
	0Fh	Incorrect access code	■	■
	10h	Size of specified data field cannot be changed	■	■
	11h	Specified word address lies outside the data field	■	■
	12h	Access to non-existent data field	■	■
Position	01h	Analog signals outside specification	■	■
	1Fh	Speed too high, no position formation possible	■	■
	20h	Singleturn position unreliable	■	■
	21h	Multiturn position error		■
	22h	Multiturn position error		■
	23h	Multiturn position error		■
Other	1Ch	Value monitoring of the analog signals (process data)	■	■
	1Dh	Transmitter current critical (contamination, transmitter breakage)	■	■
	1Eh	Encoder temperature critical	■	■
	08h	Counter overflow	■	■
For more information on the interface see HIPERFACE® - description, part no. 8010701				

Recommended accessories

Other models and accessories ➜ www.sick.com/SFS_SFM60

	Brief description	Type	part no.
programming devices			
	• **Product segment:** Programming devices • **Product family:** PGT-11-S • **Description:** SVip® LAN programming tool for all motor feedback systems • **Items supplied:** 1x programming tool PGT-11-S LAN, 1x power supply unit 100-240 V AC / 12 V DC, primary adapter (Europe, UK, USA/Japan, Australia), Ethernet cable 3 m	PGT-11-S LAN	1057324

	Brief description	Type	part no.
Mounting systems			
	• **Product family:** Stator couplings • **Description:** One-sided stator coupling, slot, slot radius 33 mm to 48.5 mm, slot width 5.1 mm	BEF-DS01DFS/VFS	2047428
	• **Product family:** Stator couplings • **Description:** Stator coupling with hole circle diameter Ø72 mm	BEF-DS07XFX	2059368
	• **Product family:** Stator couplings • **Description:** One-sided stator coupling, slot, slot radius 32.25 mm to 141.75 mm, slot width 5.1 mm	BEF-DS02DFS/VFS	2047430
	• **Product family:** Stator couplings • **Description:** One-sided stator coupling, slot, slot radius 33 mm to 211.9 mm, slot width 5.1 mm	BEF-DS03DFS/VFS	2047431
	• **Product family:** Stator couplings • **Description:** Stator coupling, 16.5 mm high	BEF-DS05XFX	2057423

SICK AT A GLANCE

SICK is one of the leading manufacturers of intelligent sensors and sensor solutions for industrial applications. A unique range of products and services creates the perfect basis for controlling processes securely and efficiently, protecting individuals from accidents and preventing damage to the environment.

We have extensive experience in a wide range of industries and understand their processes and requirements. With intelligent sensors, we can deliver exactly what our customers need. In application centers in Europe, Asia and North America, system solutions are tested and optimized in accordance with customer specifications. All this makes us a reliable supplier and development partner.

Comprehensive services complete our offering: SICK LifeTime Services provide support throughout the machine life cycle and ensure safety and productivity.

For us, that is “Sensor Intelligence.”

WORLDWIDE PRESENCE:

Contacts and other locations –www.sick.com