NOTES:
1. MATERIAL: SEE TABLE
2. FINISHES: SEE TABLE
3. ELECTRICAL SPECIFICATIONS:
   VOLTAGE RATING: 150V AC/DC
   CURRENT RATING: 1.5 AMPS
4. PROTECTION: IP67
5. ASSEMBLY IS RoHS COMPLIANT
   BY EXEMPTION

PANEL CUTOUT

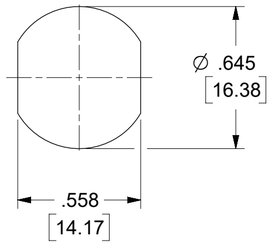

WIRING DIAGRAM

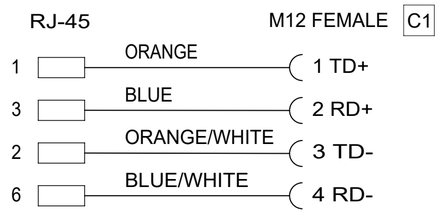

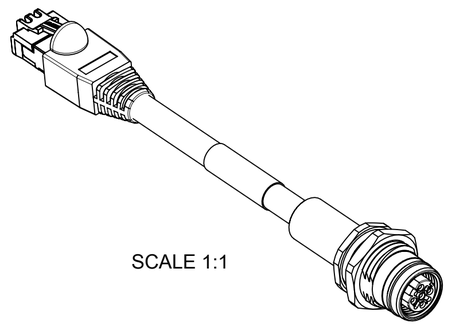

SCALE 1:1

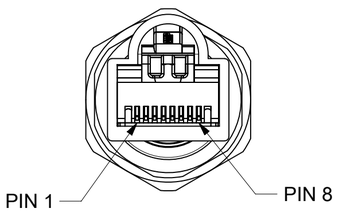

VIEW FROM THE FRONT SIDE

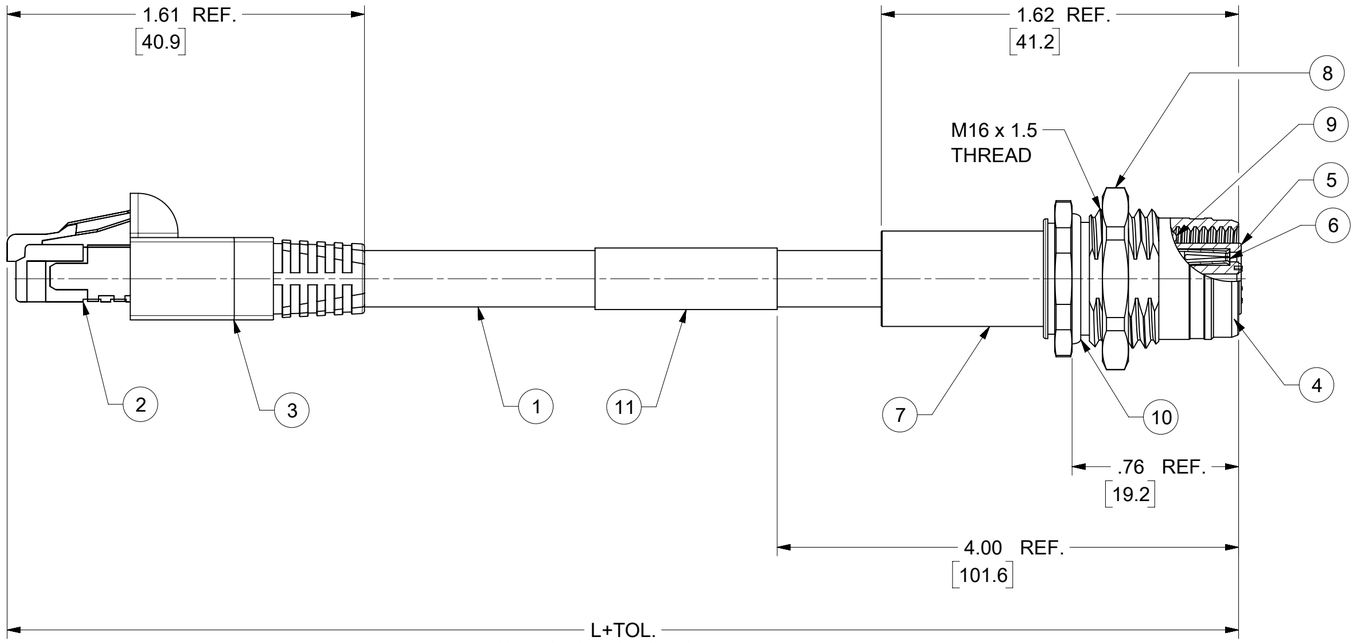

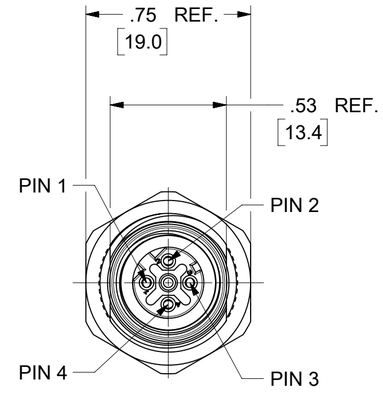

VIEW FROM THE FRONT SIDE

BOM

ITEM	QTY.	DESCRIPTION	MATERIAL	FINISH/COLOR
1	-	CABLE 24AWG	PVC	TEAL
2	1	RJ45-PLUG	-	-
3	1	RJ PVC SLEEVE	PVC	BLACK
4	1	M12 FEMALE REC. SHELL	BRASS	Ni-PLATED
5	1	M12 4P FEMALE INSERT	TPU	BLACK
6	4	FEMALE CONTACT	Cu ALLOY	GOLD OVER NICKEL
7	1	CABLE SLEEVE	BRASS	Ni-PLATED
8	1	M16 COUPLING NUT	BRASS	Ni-PLATED
9	1	GASKET	FPM	RED
10	1	O-RING	NBR	BLACK
11	1	LABEL	VINYL	YELLOW

DOCUMENT STATUS | P1 | RELEASE DATE | 2024/11/12 10:36:30

C1

CABLE LENGTH TOLERANCES
<.3M [1FT]: +19mm-0 [+.75in-0]
.3 - .9M [1 - 3FT]: +44.5mm-0 [+1.75in-0]
.9 - 1.8M [3 - 6FT]: +55.6mm-0 [+2.19in-0]
1.8 - 3.7M [6 - 12FT: +88.9mm-0 [+3.50in-0]
3.7 - 7.3M [12 - 24FT]: +165.1mm-0 [+6.50in-0]
7.3-14.6M [24 - 48FT]: +317.5mm-0 [+12.50in-0]
14.6 - 30.5M [48-100FT]: +622.3mm-0 [+24.50in-0]
OVER 30M [100FT] +2% OF FINISHED LENGTH

C1 PART LIST

MOLEX PN	ENGINEERING No.	L
1300540001	ERWPAU7003M002	7.9" (0.2M)
1300540002	ERWPAU7003M003	11.8" (0.3M)
1300545001	ERWPAU7003M005	1' 7.7" (0.5M)
1201090005	ERWPAU7003M006	1' 11.6" (0.6M)
1300545003	ERWPAU7003M010	3' 3" (1M)
1201090003	ERWPAU7003M020	6' 7" (2M)
1201090008	ERWPAU7003M030	9' 10" (3M)
1201090012	ERWPAU7003M050	16' 4" (5M)
1201090017	ERWPAU7003M150	49' 2" (15M)

THIS DRAWING CONTAINS INFORMATION THAT IS PROPRIETARY TO MOLEX ELECTRONIC TECHNOLOGIES, LLC AND SHOULD NOT BE USED WITHOUT WRITTEN PERMISSION

FUNCTIONAL SYMBOLS
FA = 0
FC = 0
FP = 0
DIVISIONAL SYMBOLS

DIMENSION UNITS: INCH/MM
SCALE: 2:1

GENERAL TOLERANCES (UNLESS SPECIFIED)

	MM	INCH
4 PLACES	±	±
3 PLACES	±	±
2 PLACES	±	± 0.01
1 PLACE	± 0.3	±
0 PLACES	±	±
ANGULAR TOL	± 2.0 °	

DRAFT WHERE APPLICABLE MUST REMAIN WITHIN DIMENSIONS

CURRENT REV DESC: ADDED NEW PART NUMBERS WITH DIFFERENT LENGHTS TO THE TABLE & UPDATED THE TABLE. UPDATED THE RECEPTACLE DESCRIPTION AND DESCRIPTION ON THE TITLE BLOCK. ADDED TOLERANCE TABLE ON THE DRAWING.

EC NO: 804024
DRWN: VHANDI 2024/11/05
CHK'D: RSILLER 2024/11/12
APPR: RSILLER 2024/11/12

INITIAL REVISION:
DRWN: RSTONE 2013/03/12
APPR: JFMURPHY 2013/04/25

THIRD ANGLE PROJECTION | DRAWING: A2-SIZE | SERIES: 120109

molex

MIC ETHERNET CORDSET
M12 FEMALE U-LOCK RECEPT TO RJ-45 PLUG. 24 AWG

PRODUCT CUSTOMER DRAWING

DOCUMENT NUMBER	DOC TYPE	DOC PART	REVISION
SD-120109-013	PSD	001	C1

MATERIAL NUMBER	CUSTOMER	SHEET NUMBER
SEE PART LIST	GENERAL MARKET	1 OF 1

FORMAT: Mid-large-master-tb-prod-A2
REVISION: E1
DATE: 2021/05/01