Product data sheet

Specifications



Circuit breaker, PowerPacT P, 250A, 3 pole, 600VAC, 18kA, lugs, Micrologic 5.0, 80%

PGL36025U33A

Product availability: Non-Stock - Not normally stocked in distribution facility

Main

Range	PowerPact
Product name	PowerPact P
Product or Component Type	Circuit breaker
Device Application	Distribution

Complementary

Line Rated Current	250 A
Number of Poles	3P
Control Type	Toggle
Breaking capacity code	G
Breaking capacity	AIR 65 kA 240 V AC 50/60 Hz UL 489 AIR 35 kA 480 V AC 50/60 Hz UL 489 AIR 18 kA 600 V AC 50/60 Hz UL 489 Icu 50 kA 240 V AC 50/60 Hz IEC 60947-2 Icu 35 kA 380/415 V AC 50/60 Hz IEC 60947-2
[Ue] rated operational voltage	600 V AC 50/60 Hz UL 489
Network Frequency	50/60 Hz
[Ics] rated service breaking capacity	25 kA 240 V AC 50/60 Hz IEC 60947-2 20 kA 380/415 V AC 50/60 Hz IEC 60947-2
[Uimp] rated impulse withstand voltage	8 kV IEC 60947-2
Trip unit technology	Electronic, standard, MicroLogic 5.0, LSI
Continuous current rating	80 %
[Ui] rated insulation voltage	750 V IEC 60947-2
Trip unit name	MicroLogic 5.0
AWG gauge	3 x AWG 3/0...500 kcmil aluminium/copper
Local signalling	Overload 1 1 LED amber) 1 trip indicator green)
Electrical connection	Lugs, load Lugs, line
Terminal identifier	AL800M23K
Long time pick-up adjustment range	0.4...1 x Ir
Tightening torque	442.5 lbf.in (50 N.m) 0.1…0.4 in² (95…240 mm²) (3 x AWG 3/0...500 kcmil) 8.9…11.5 lbf.in (1.0…1.3 N.m)

Price is “List Price” and may be subject to a trade discount – check with your local distributor or retailer for actual price.

Disclaimer: This documentation is not intended as a substitute for and is not to be used for determining suitability or reliability of these products for specific user applications

Number of slots	2 auxiliary switch OF plug-in) 1 alarm switch SD plug-in) 1 overcurrent trip switch SDE plug-in) 1 voltage release MN or MX plug-in)
Power wire stripping length	1.0 in (25 mm)
Height	12.86 in (326.64 mm)
Width	8.27 in (210.06 mm)
Depth	8.05 in (204.47 mm)
Net Weight	32 lb(US) (14.5 kg)
Quantity per Set	1
Circuit breaker application	HACR rated

Environment

Quality labels	CE
Standards	UL CSA NEMA NOM-003-SCFI-2000 IEC 60947-2
Product certifications	UL CSA NOM
IP degree of protection	Front cover IP40
Pollution degree	3 IEC 60947-1
Ambient air temperature for operation	-13…158 °F (-25…70 °C)
Ambient Air Temperature for Storage	-58…185 °F (-50…85 °C)
Operating altitude	< 6561.68 ft (2000 m) without derating 13123.36 ft (4000 m) with derating

Ordering and shipping details

Category	US10DE201215
Discount Schedule	0DE2
GTIN	785901622079
Returnability	Yes
Country of origin	US

Packing Units

Unit Type of Package 1	PCE
Nbr. of units in pkg.	1
Package 1 Height	11.75 in (29.845 cm)
Package 1 Width	11.63 in (29.528 cm)
Package 1 Length	20.25 in (51.435 cm)
Package weight(Lbs)	32.0001 lb(US) (14.515 kg)

Contractual warranty

Warranty	18 months

Environmental Data

Schneider Electric aims to achieve Net Zero status by 2050 through supply chain partnerships, lower impact materials, and circularity via our ongoing “Use Better, Use Longer, Use Again” campaign to extend product lifetimes and recyclability.

Environmental Data explained >

How we assess product sustainability >

Environmental footprint

Carbon footprint (kg CO2 eq, Total Life cycle)	783
Environmental Disclosure	Product Environmental Profile

Use Better

Materials and Substances

Packaging made with recycled cardboard	Yes
Packaging without single use plastic	No
EU RoHS Directive	Compliant with Exemptions
REACh Regulation	REACh Declaration
California proposition 65	WARNING: This product can expose you to chemicals including: DINP, which is known to the State of California to cause cancer, and DIDP, which is known to the State of California to cause birth defects or other reproductive harm. For more information go to www.P65Warnings.ca.gov
PVC free	Yes

Use Again

Repack and remanufacture

Circularity Profile	End of Life Information
Removable battery	Yes
Take-back	No

Technical Illustration

Dimensions

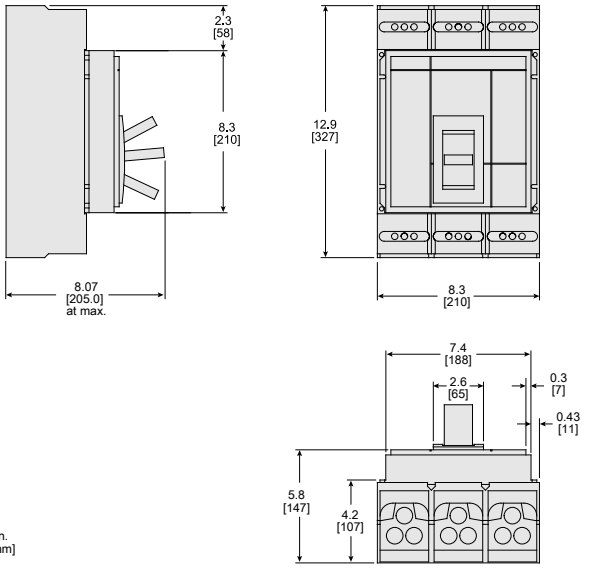

ALL DIMENSIONS ARE APPROXIMATE.
REFER TO TECHNICAL DRAWINGS AND DOCUMENTATION FOR COMPLETE INFORMATION.