Data Sheet | Item Number: 2059-903/021-000

Board-to-Board Link; Pin spacing 3 mm; 3-pole; Length: 20.5 mm; white

https://www.wago.com/2059-903/021-000

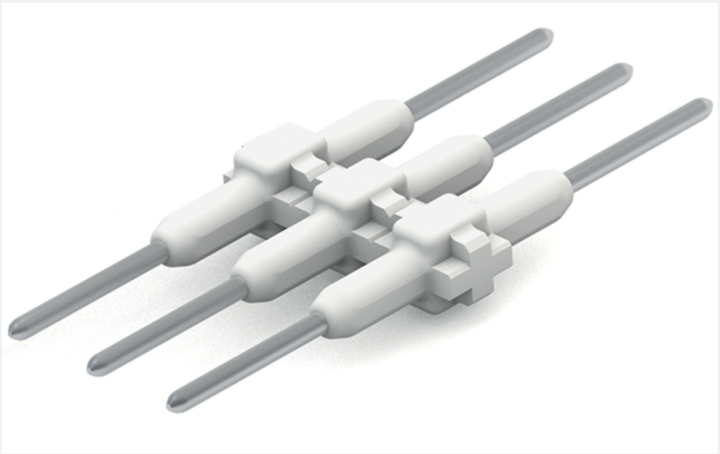

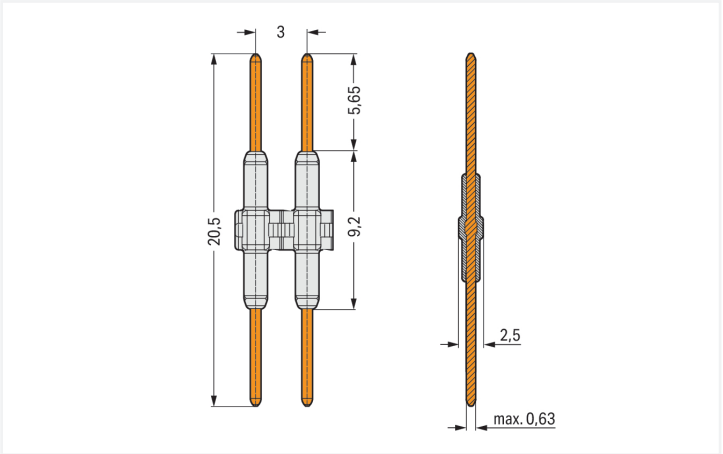

Color: white

Dimensions in mm

- Board-to-board links simplify LED module assembly
- Easy push-in connection and disconnection

Electrical data

Ratings per	IEC/EN 60664-1		
Overvoltage category	III	III	II
Pollution degree	3	2	2
Nominal voltage	63 V	160 V	320 V
Rated impulse withstand voltage	2.5 kV	2.5 kV	2.5 kV
Rated current	3 A	3 A	3 A

Connection Data

Total number of potentials	3

Connection 1

Number of poles	3

Physical data

Pin spacing	3 mm / 0.118 inches
Width	8.7 mm / 0.343 inches
Height	2.5 mm / 0.098 inches
Depth	20.5 mm / 0.807 inches

Continued on next page

Mechanical data

Mating cycles (max.)	10
Number of mating cycles	10 connections/disconnections (max.)
Suitable	for SMD PCB terminal blocks (2059 Series)

Material data

Note (material data)	Information on material specifications can be found here
Color	white
Material group	I
Insulation material (main housing)	Polyamide (PA66)
Flammability class per UL94	V0
Contact material	Copper alloy
Contact Plating	Silver
Fire load	0.002 MJ
Weight	0.2 g

Environmental requirements

Limit temperature range	-60 … +105 °C
Ambient temperature (installation)	-35 … +60 °C

Environmental Testing

Test specification: Railway applications – Rolling stock – Electronic equipment	DIN EN 50155 (VDE 0115-200):2022-06
Test procedure: Railway applications – Rolling stock equipment – Vibration and shock tests	DIN EN 61373 (VDE 0115-0106):2011-04
Spectrum/Mounting location	Service life test, Category 1, Class A/B
Functional test with noise-like oscillations	Test passed according to Section 8 of the standard
Frequency	f_1 = 5 Hz to f_2 = 150 Hz
Acceleration	0.101g (highest test level used for all axes)
Test duration per axis	10 min.
Test directions	X, Y and Z axes
Monitoring of contact faults and interruptions	Passed
Voltage drop measurement before and after each axis	Passed
Simulated service life test through increased levels of noise-like oscillations	Test passed according to Section 9 of the standard
Frequency	f_1 = 5 Hz to f_2 = 150 Hz
Acceleration	0.572g (highest test level used for all axes)
Test duration per axis	5 h
Test directions	X, Y and Z axes
Extended testing: Monitoring of contact faults and interruptions	Passed
Extended testing: Voltage drop measurement before and after each axis	Passed
Shock test	Test passed according to Section 10 of the standard
Shock pulse form	Half sine
Acceleration	5g (highest test level used for all axes)
Shock duration	30 ms
Number of shocks (per axis)	3 pos. und 3 neg.
Test directions	X, Y and Z axes
Extended testing: Monitoring of contact faults and interruptions	Passed
Extended testing: Voltage drop measurement before and after each axis	Passed

Continued on next page

Environmental Testing

Vibration and shock stress for rolling stock equipment	Passed

Commercial data

PU (SPU)	375 pcs
Packaging type	Box
Country of origin	CN
GTIN	4055143610001
Customs tariff number	85369010000

Product Classification

UNSPSC	39121409
eCl@ss 10.0	27-14-11-92
eCl@ss 9.0	27-14-11-92
ETIM 9.0	EC002848
ETIM 10.0	EC002848
ECCN	NO US CLASSIFICATION

Environmental Product Compliance

RoHS Compliance Status	Compliant,No Exemption

Approvals / Certificates

General approvals

Approval	Standard	Certificate Name
CCA DEKRA Certification B.V.	EN 60947-7-4	NTR NL-7819
CCA DEKRA Certification B.V.	EN 60947-7-4	71-111131
CCA DEKRA Certification B.V.	EN 60838	NTR NL-7720
cURus Underwriters Laboratories Inc.	UL 1059	E45172
KEMA/KEUR DEKRA Certification B.V.	EN 60838	71-106226
UL Underwriters Laboratories Inc.	UL 1977	E45171

Declarations of conformity and manufacturer's declarations

Approval	Standard	Certificate Name
Railway WAGO GmbH & Co. KG	-	Z00004395.000

Continued on next page

Downloads

Environmental Product Compliance

Compliance Search

Environmental Product Compliance
2059-903/021-000

Documentation

Additional Information

Technical Section	03.04.2019	pdf 2027.26 KB

CAD/CAE-Data

CAD data

2D/3D Models
2059-903/021-000

CAE data

ZUKEN Portal
2059-903/021-000

Installation Notes

Installation



Installation

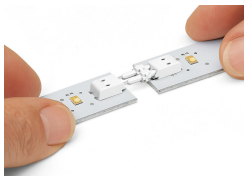

Installation

