BMMA Male Bulkhead Mount Connector Solder Attachment for PE-SR405AL, PE-SR405FL, PE-SR405FLJ, RG405, RG405 Tinned, .085 Cable



PE5137

Configuration

- BMMA Male Connector
- 50 Ohms
- Straight Body Geometry
- Connector Interface Types: PE-SR405AL, PE-SR405FL, PE-SR405FLJ, RG405, RG405 Tinned, .085 Cable
- Bulkhead

Features

- Max. Operating Frequency 28 GHz
- Good VSWR of 1.35:1
- Gold Plated Beryllium Copper Contact

Applications

- General Purpose Test
- Rack and Panel Mount Applications
- Custom Cable Assemblies

Description

Pasternack's PE5137 BMMA Connector is part of our full line of RF components available for same-day shipping. Our BMMA male connector operates up to a maximum frequency of 28 GHz and offers good VSWR of 1.35:1.

Our BMMA male connector PE5137 datasheet specifications and drawing with dimensions are shown below in this PDF. Pasternack's broad catalog of RF, microwave and millimeter wave connectors allows designers to configure and customize their signal connections however they like. Whether the need is to provide an I/O for a board design, or simply create a custom cable assembly configuration, Pasternack has the right connector for the job. Pasternack can also expertly build your custom cable assemblies for you and ship same-day.

Electrical Specifications

Description	Minimum	Typical	Maximum	Units
Frequency Range	DC		28	GHz
VSWR			1.35:1	
Insertion Loss			0.529	dB
Impedance		50		Ohms

Mechanical Specifications

Size

Length	0.6 in [15.24 mm]
Width	0.3 in [7.62 mm]
Height	0.3 in [7.62 mm]
Weight	0.004 lbs [1.81 g]
Mating Cycles	500 Cycles

Material Specifications

Description	Material	Plating
Contact	Beryllium Copper	Gold
Insulation	PTFE	
Outer Conductor	Beryllium Copper	Gold
Body	Stainless Steel	Gold

© 2023 Infinite Electronics, Inc. Pasternack is a registered trademark of Infinite Electronics, Inc.
+1 (866) 558-2786 | sales@pasternack.com | pasternack.com

BMMA Male Bulkhead Mount Connector Solder Attachment for PE-SR405AL, PE-SR405FL, PE-SR405FLJ, RG405, RG405 Tinned, .085 Cable



PE5137

Environmental Specifications

Temperature

Operating Range	-65 to +165 deg C

Compliance Certifications (see product page for current document)

Plotted and Other Data

Notes:

© 2023 Infinite Electronics, Inc. Pasternack is a registered trademark of Infinite Electronics, Inc.

BMMA Male Bulkhead Mount Connector Solder Attachment for PE-SR405AL, PE-SR405FL, PE-SR405FLJ, RG405, RG405 Tinned, .085 Cable



PE5137

Assembly Instruction

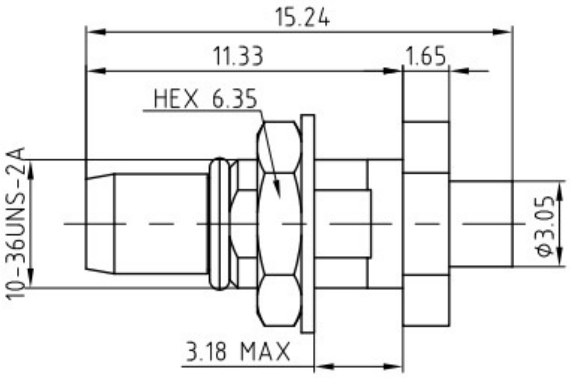

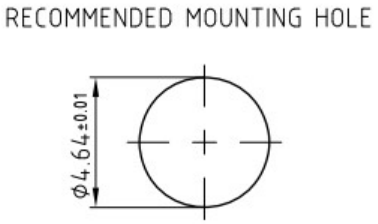

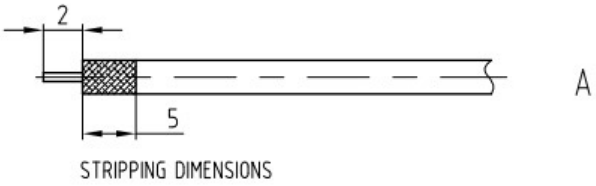

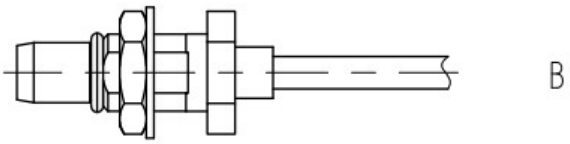

ASSEMBLY PROCEDURES

1. STRIP CABLE AS SHOWN IN (A). DO NOT NICK INNER CONDUCTOR.
2. PRE-TIN CABLE JACKET TO APPROXIMATE DIMENSION AS SHOWN IN (A).
3. INSERT CABLE THRU ADAPTER UNTIL IT BOTTOMS. SOLDER

© 2023 Infinite Electronics, Inc. Pasternack is a registered trademark of Infinite Electronics, Inc.

BMMA Male Bulkhead Mount Connector Solder Attachment for PE-SR405AL, PE-SR405FL, PE-SR405FLJ, RG405, RG405 Tinned, .085 Cable



PE5137

BMMA Male Bulkhead Mount Connector Solder Attachment for PE-SR405AL, PE-SR405FL, PE-SR405FLJ, RG405, RG405 Tinned, .085 Cable from Pasternack Enterprises has same day shipment for domestic and International orders. Our RF, microwave and millimeter wave products maintain a 99.4% availability and are part of the broadest selection in the industry.

Click the following link (or enter part number in "SEARCH" on website) to obtain additional part information including price, inventory and certifications: BMMA Male Bulkhead Mount Connector Solder Attachment for PE-SR405AL, PE-SR405FL, PE-SR405FLJ, RG405, RG405 Tinned, .085 Cable PE5137

URL: https://www.pasternack.com/bmma-male-connector-pe5137-p.aspx

The information contained within this document is accurate to the best of our knowledge and representative of the part described herein. It may be necessary to make modifications to the part and/or the documentation of the part in order to impliment improvements. Pasternack Enterprises reserves the right to make such changes as required. Unless otherwise stated, all specifications are nominal. Pasternack Enterprises does not make any representation or warranty regarding the suitability of the part described herein for any particular purpose, and Pasternack Enterprises does not assume liability arising out of the use of any part or document.

© 2023 Infinite Electronics, Inc. Pasternack is a registered trademark of Infinite Electronics, Inc.

PE5137 CAD Drawing

BMMA Male Bulkhead Mount Connector Solder Attachment for PE-SR405AL, PE-SR405FL, PE-SR405FLJ, RG405, RG405 Tinned, .085 Cable

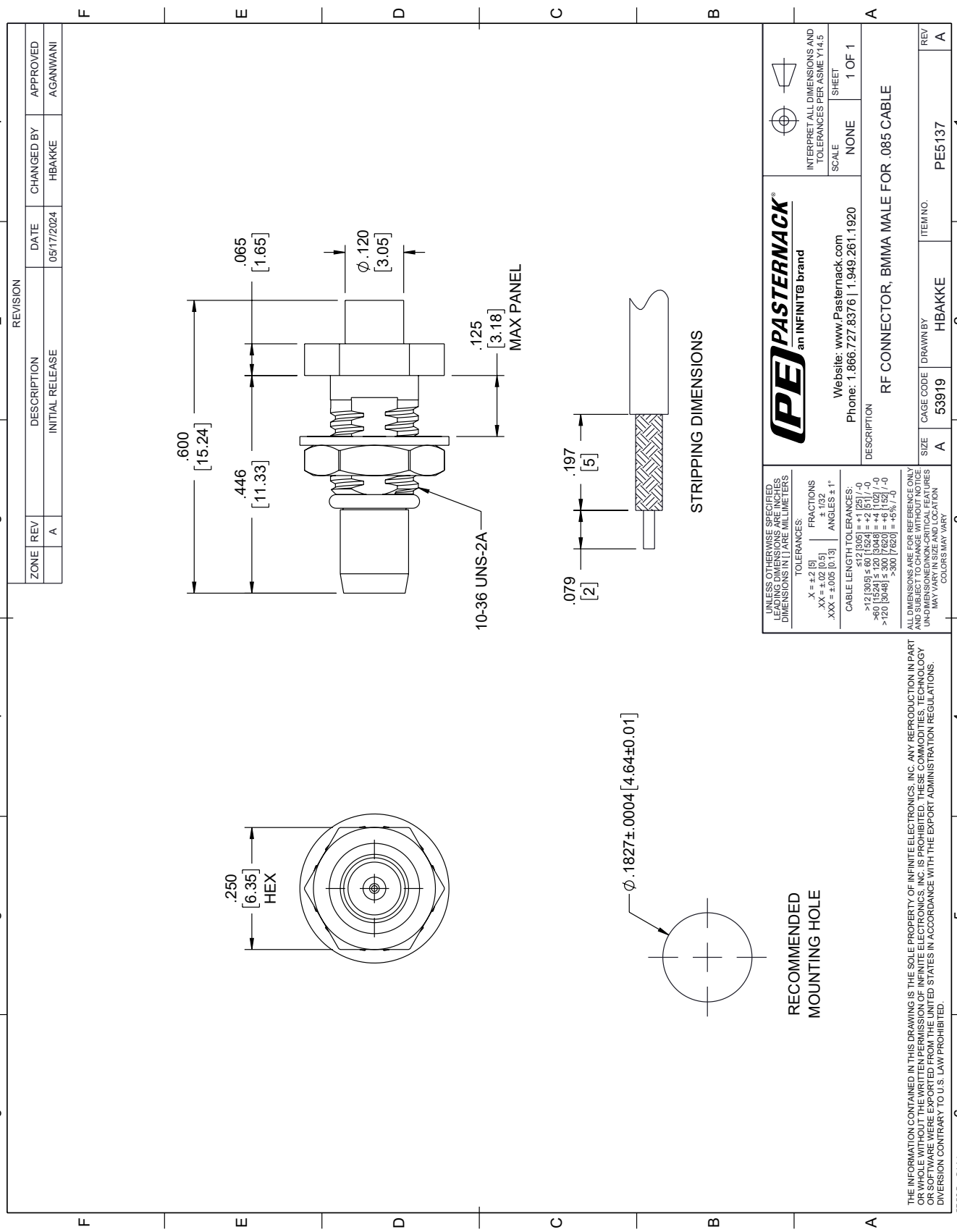

© 2023 Infinite Electronics, Inc. Pasternack is a registered trademark of Infinite Electronics, Inc.