RoHS compliant
by exemption

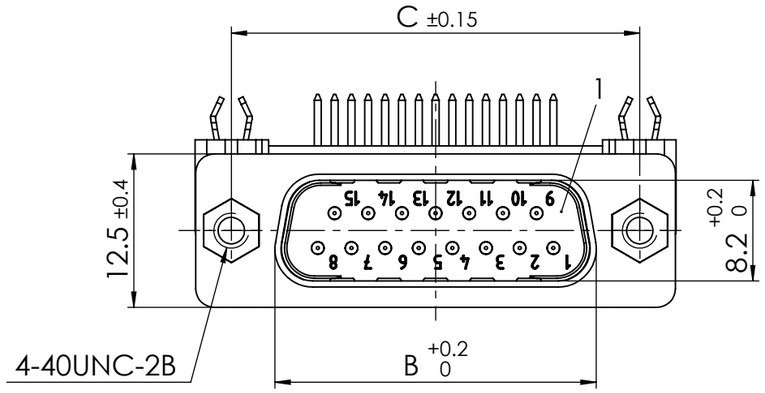

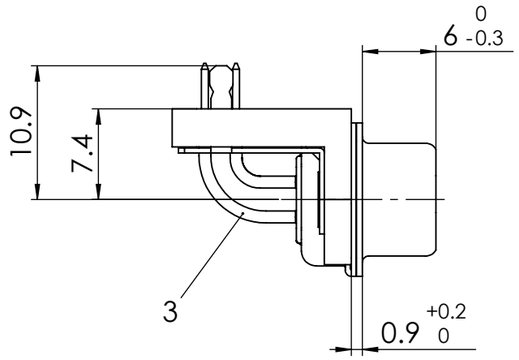

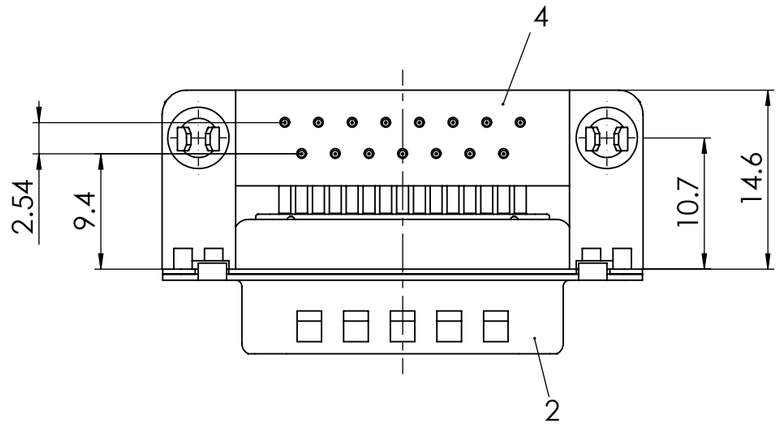

Fxx*1)P5G1A-0326

e.g. F15P5G1A-0326

*) xx No. of contacts 09, 15, 25 or 37

MATERIAL NUMBER	xx*)	A [mm]	B [mm]	C [mm]	*E [mm]	*F [mm]	*G [mm]	*H [mm]	*J [mm]
1731091918	09	30.8	16.9	25	ø1	ø3	10.7	9.4	2.54
1731091897	15	39.1	25.2	33.3					
1731091903	25	53	38.9	47.04					
1731091909	37	69.3	55.3	63.5					

*PCB hole patterns, øE,ø F, G, H, J see on document AM0024 (2195600024)

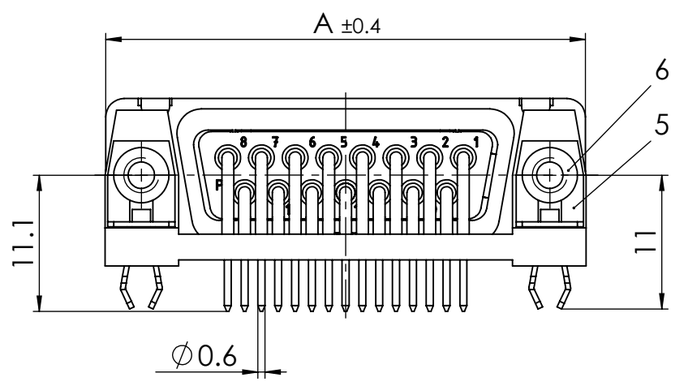

No.	St.	Part	Type Description/Material	Surface plating/Colour/Class
6	2	Clinch nut	4-40 / Brass	tin plated
5	2	Snap-in bracket	PCB 1.6mm/ Bz	tin plated
4	1	Plastic bracket	FKW1/4 GS /PC	black
3	xx	Signal contact	P5 / Brass	AuroPur
2	1	Shell	Steel	tin plated
1	1	Insulator	PBT (-55°C to +125°C) acc. UL94V-0	white

THIS DRAWING CONTAINS INFORMATION THAT IS PROPRIETARY TO MOLEX ELECTRONIC TECHNOLOGIES, LLC AND SHOULD NOT BE USED WITHOUT WRITTEN PERMISSION

FUNCTIONAL SYMBOLS
= 0
= 0
= 0

DIMENSION UNITS: mm
SCALE: 2:1
MEASUREMENTS WITHOUT TOLERANCE ACC. TO: ISO 2768-mK

REV.	CH.-NO.
3	24410
2	24130
1	

CURRENT REVISION
DRWN: DRAWN BY mteubel 11-03-2024
APPR: APPR BY msteinbrueck 23-04-2024

INITIAL REVISION
DRWN: DRAWN BY tschneider01 10-05-2017
APPR: APPR BY MTeubel 11-05-2017

REPLACEMENT FOR: 1731091918_Rev. A
FRIST ANGLE PROJECTION
DRAWING: A3-SIZE

molex

FCT D-Sub Miniature Connector

PRODUCT CUSTOMER DRAWING

MATERIAL NUMBER: see table
REVISION: 3
DOCUMENT NUMBER: FxxP5G1A-0326
CUSTOMER: GENERAL MARKET
SHEET NUMBER: 1 OF 1

COMMENT:
ALL RIGHTS ARE RESERVED BY US FOR THIS DRAWING, WITHOUT OUR PRIOR CONSENT,
IT MAY NEITHER BE DUBLICATED NOR MADE AVAILABLE TO A THIRD PARTY,
AND IT ALSO MAY NOT BE IMPROPERLY USED BY TE RECEIVER, OR A THIRD PARTY.

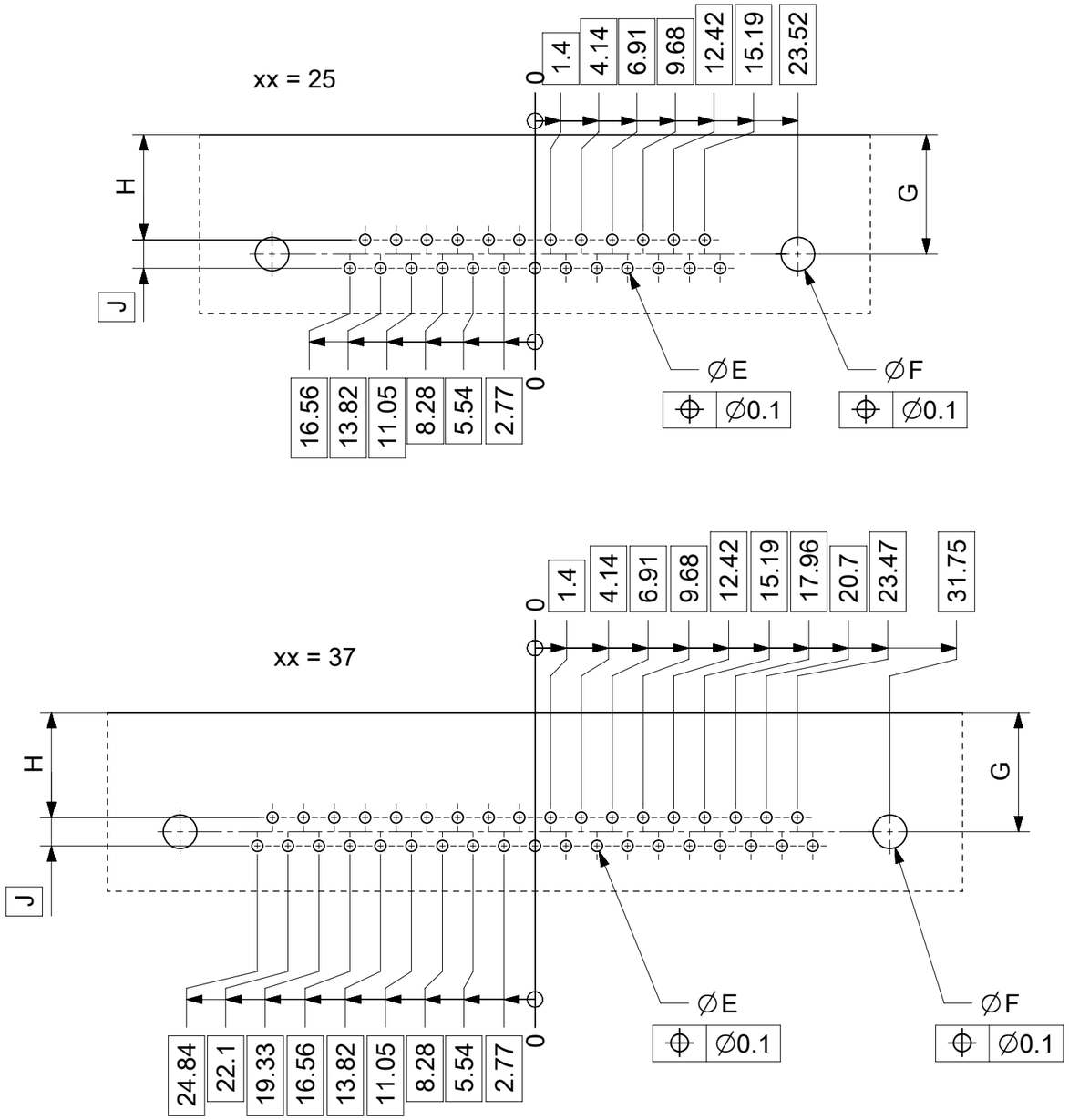

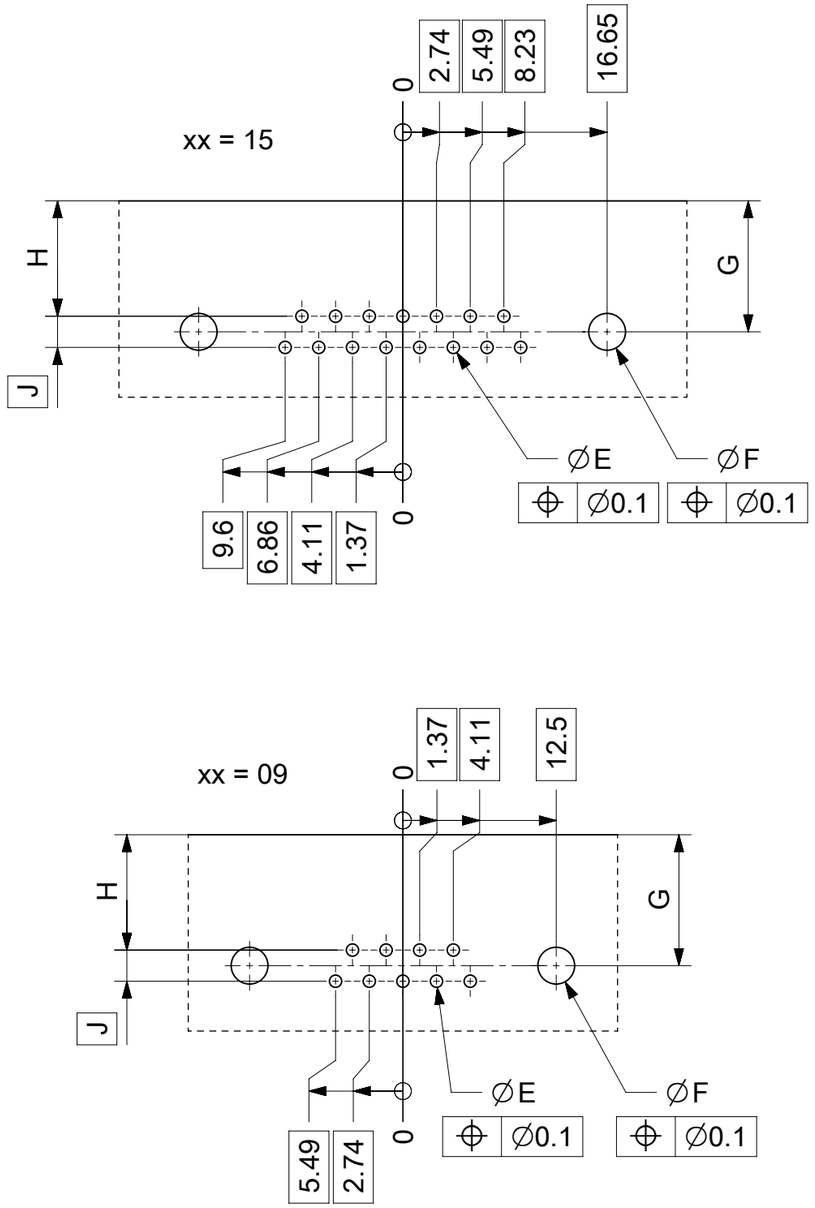

øE, øF, G, H, J see data sheet incl. connector
øF, G connectors with accessories only

MEASUREMENTS WITHOUT TOLERANCE ACC TO ISO 2768-m

REPLACEMENT FOR DOCUMENT NUMBER: AM0024

THIS DRAWING CONTAINS INFORMATION THAT IS PROPRIETARY TO MOLEX ELECTRONIC TECHNOLOGIES, LLC AND SHOULD NOT BE USED WITHOUT WRITTEN PERMISSION

FUNCTIONAL SYMBOLS: FA = 0, FC = 0, FP = 0

DIVISIONAL SYMBOLS

DIMENSION UNITS	SCALE
mm	2:1

GENERAL TOLERANCES (UNLESS SPECIFIED)

ANGULAR TOL	± °
4 PLACES	±
3 PLACES	±
2 PLACES	±
1 PLACE	±
0 PLACES	±

DRAFT WHERE APPLICABLE MUST REMAIN WITHIN DIMENSIONS

CURRENT REV DESC:

EC NO: 713905
DRWN: SKANDB 2022/05/16
CHK'D: MTEUBEL 2022/07/12
APPR: MTEUBEL 2022/07/12

INITIAL REVISION:
DRWN: SKANDB 2022/05/16
APPR: MTEUBEL 2022/07/12

molex

FCT PCB HOLE PATTERN RIGHT ANGL. CONTACT
NO. OF CONTACTS 09-37

PRODUCT CUSTOMER DRAWING

DOCUMENT NUMBER	DOC TYPE	DOC PART	REVISION
2195600024	PSD	000	A

FIRST ANGLE PROJECTION	DRAWING	SERIES	MATERIAL NUMBER	CUSTOMER	SHEET NUMBER
	A3-SIZE	219560	219560	GENERAL MARKET	1 OF 1

DOCUMENT STATUS	P1	RELEASE DATE	2022/07/12 08:25:55

FORMAT: master_tb_mod-A3
REVISION: J1
DATE: 2021/05/01