Pushing Performance
Since 1945

M12-ADPT-M12/M12-8/8P-ACOD-M/F/F-STR



Image is for illustration purposes only. Please refer to product description.

Part number	21 03 311 6801
Specification	M12-ADPT-M12/M12-8/8P-ACOD-M/F/F-STR
HARTING eCatalogue	https://b2b.harting.com/21033116801

Identification

Category	Accessories
Series	Circular connectors M12
Connector 1	Female 8 poles A-coding
Connector 2	Female 8 poles A-coding
Type of accessory	Y-distributor

Version

Gender	Male Female
Shielding	Unshielded
Number of contacts	8
Coding	A-coding

Technical characteristics

Rated current	2 A
Rated voltage	30 V
Limiting temperature	-30 ... +85 °C
Mating cycles	≥100
Degree of protection acc. to IEC 60529	IP67 mated condition

HARTING Electronics GmbH | Marienwerderstraße 3 | 32339 Espelkamp | Germany
Phone +49 5772 47-97200 | electronics@HARTING.com | www.HARTING.com

Pushing Performance
Since 1945

Material properties

Material (insert)	Polyamide (PA)
Material (contacts)	Copper alloy
Surface (contacts)	Au over Ni Mating side
Material (hood/housing)	Thermoplastic polyurethane (TPU)
Material flammability class acc. to UL 94	V-0
RoHS	compliant with exemption
RoHS exemptions	6(c): Copper alloy containing up to 4 % lead by weight
ELV status	compliant with exemption
China RoHS	50
REACH Annex XVII substances	Not contained
REACH ANNEX XIV substances	Not contained
REACH SVHC substances	Yes
REACH SVHC substances	Lead
ECHA SCIP number	0d7d3693-d625-47ab-934a-d241bf72c86e
California Proposition 65 substances	Yes
California Proposition 65 substances	Lead Nickel

Specifications and approvals

Specifications	IEC 61076-2-101

Commercial data

Packaging size	1
Net weight	27.4 g
Country of origin	Germany
European customs tariff number	85366990
GTIN	5713140236622
ETIM	EC002943
eCl@ss	27440292 Connector component (accessories)

HARTING Electronics GmbH | Marienwerderstraße 3 | 32339 Espelkamp | Germany
Phone +49 5772 47-97200 | electronics@HARTING.com | www.HARTING.com

Pushing Performance
Since 1945

Pin assignment

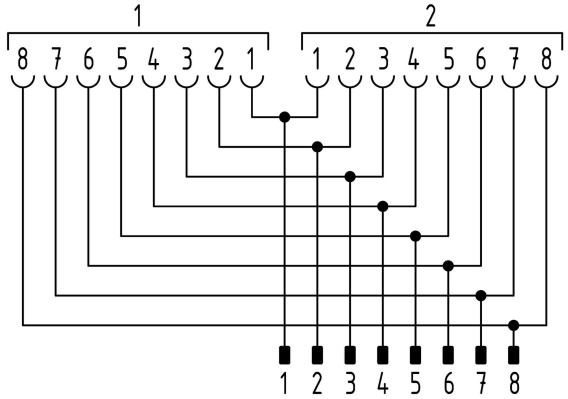

HARTING Electronics GmbH | Marienwerderstraße 3 | 32339 Espelkamp | Germany
Phone +49 5772 47-97200 | electronics@HARTING.com | www.HARTING.com