Ignition Gate Drive IC

FAN1100-F085



SOIC8
CASE 751EB

Description

The FAN1100−F085 is designed to directly drive an ignition IGBT and control the current and spark event of the coil. The coil current is controlled via the input pin. When the input is driven high, the output of the FAN1100−F085 is enabled to turn on the IGBT and start charging the coil. The FAN1100−F085 will sink a current (IIN) into the input pin based on programmed current on the RA line.

An input spike filter suppresses input signals of less then 13 μs in duration. A Max Dwell timer is included in the FAN1100−F085 which will turn off the IGBT if the input stays active for longer than the programmed time. This time interval can be modified through an external capacitor on the CSSD pin. When the Max Dwell timer is exceeded, the FAN1100−F085 will enter a Soft−Shut−Down mode (SSD) slowly dropping the collector current by lowering the gate drive to the IGBT thereby discharging the coil such as to inhibit a spark event. Once the soft shutdown operation has started, any transitions on the input signal are ignored until after completion of the soft shutdown function. The FAN1100−F085 will also limit the collector current of the IGBT to $I_{C(lim)}$ during charging. This again is done through the sense resistor in the emitter leg of the Ignition IGBT developing a signal input to the Vsense pin of the FAN1100−F085.

Features

- Signal Line Input Buffer
- Input Spike Filter
- Operation from Ignition or Battery Line
- Ground Shift Tolerance ±1.5 V
- Programmable Maximum Dwell Time
- Programmable Input Pull Down Current
- Control IGBT Current Limiting through V_{SENSE} Pin
- Soft Shutdown following Max Dwell Time Out
- This is a Pb−Free Device

Applications

The FAN1100−F085 is an advanced Ignition IGBT control IC available in a SO8 package or die sales. This full featured Smart Ignition IGBT Driver is particularly advantageous in “switch on coil” applications where size and system performance of the ignition driver are important.

MARKING DIAGRAM

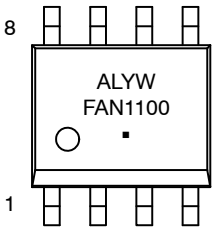

FAN1100	= Specific Device Code
AL	= Assembly Lot Code
Y	= Year
W	= Work Week
▪	= Pb−Free Package

ORDERING INFORMATION

See detailed ordering and shipping information on page 2 of this data sheet.

© Semiconductor Components Industries, LLC, 2014

ORDERING INFORMATION

Part Number	Operating Temperature Range	Package	Shipping†
FAN1100−F085	−40°C to 150°C	8−SOIC	2500 units / Tape & Reel

†For information on tape and reel specifications, including part orientation and tape sizes, please refer to our Tape and Reel Packaging Specification Brochure, BRD8011/D.

Recommended External Components

TYPICAL EXTERNAL COMPONENTS

Component	Description	Vendor	Parameter	Typ.	Unit
R_{BAT}	Limits transient currents during load dump		R	200 to 300	Ω
C_{BAT1}	Battery or Ignition voltage filtering		C	0.47	μF
C_{BAT}	Battery noise transients		C	10	nF
C_{IN}	Noise immunity		C	10	nF
R_{SENSE}	Sense the collector current		R	20	mΩ

Typical Application

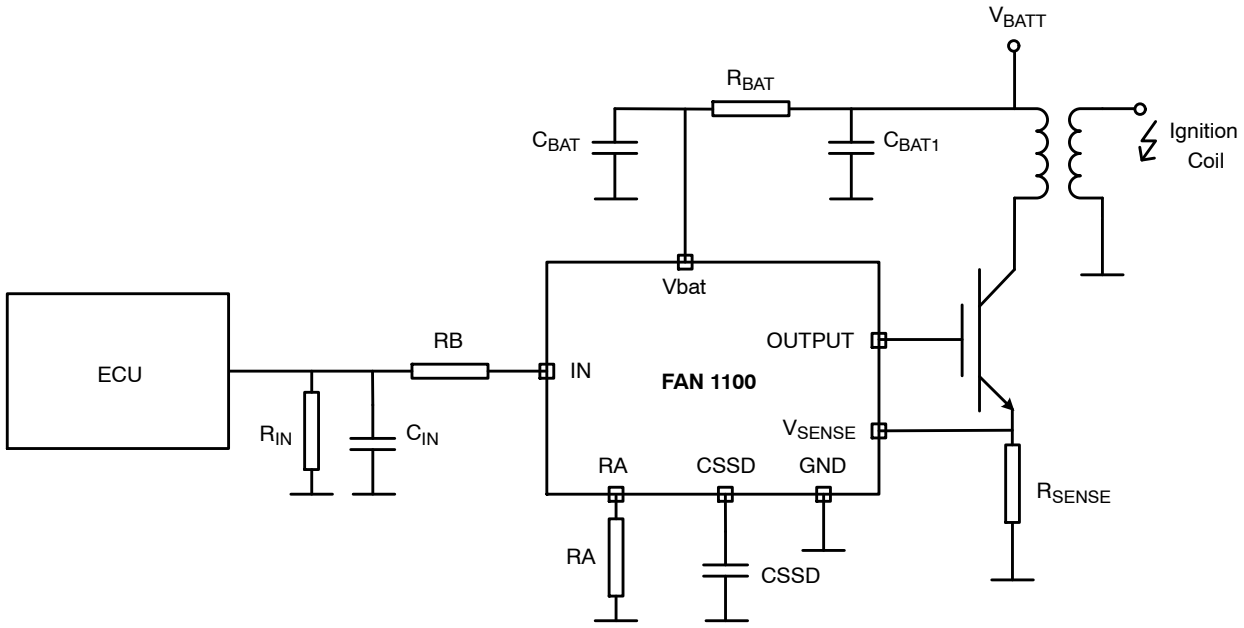

Figure 1. Typical Application

Block Diagram

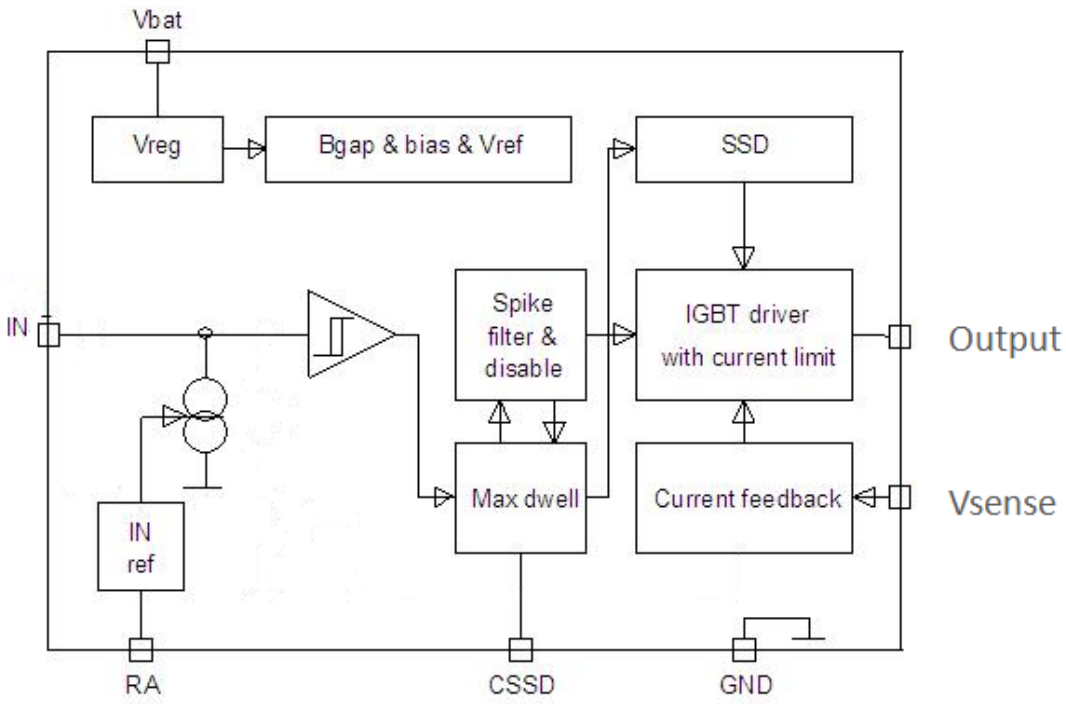

Figure 2. Block Diagram

Package Outline

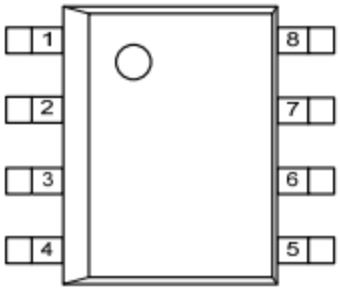

Figure 3. Pin Assignment (Top View)

PIN DESCRIPTION

Name	Type	Description
Pin1	GND	Ground Reference of the Control IC
Pin2	Input	Signal input
Pin3	NC	
Pin4	CSSD	Maximum dwell time and Soft−Shut−Down current output (to external capacitor)
Pin5	RA	Input reference current output (to external resistor)
Pin6	Output	Gate Drive to the IGBT
Pin7	V_{SENSE}	Sense Input used for Ilim function
Pin 8	V_{BAT}	Supply voltage

ABSOLUTE MAXIMUM RATINGS

Symbol	Parameter	Min.	Max.	Unit
V_{BAT}	Voltage at V_{BAT} pin (excl. EMC transients)	−0.3	28	V
V_{IN}	Voltage at Input pin with external R_{IN}	−2	16	V
V_{RA}, V_{CSSD}	Voltage at RA & C_{SSD} and Output pins	−0.3	5	V
V_{OUTPUT}	Voltage at Gate Output	−0.3	6.5	V
V_{SENSE}	Voltage on V_{SENSE} pin	0	400	mV
T_J , T_{STG}	Operating and Storage Temperature Range	−40	150	°C
P_{MAX}	Maximum power dissipation (continuous) at T_C = 25°C		0.625	W
$R_{\theta JC}$	Thermal Resistance − Junction−to−Case (typical)		200	°C /W
V_{ESD} (pin to pin)	Electrostatic Discharge Voltage (Human Body Model) according to MIL STD 883D, method 3015.7 and EOS/ESD Assn. standard S5.1 − 1993		2	kV

Stresses exceeding those listed in the Maximum Ratings table may damage the device. If any of these limits are exceeded, device functionality should not be assumed, damage may occur and reliability may be affected.

RECOMMENDED OPERATING CONDITIONS (Reference Load Characteristics) (Note 1)

Symbol	Characteristic	Min.	Typ.	Max.	Units
I_{Ctyp}	Collector (Coil) Operating Current		12		A
L_P	Coil Primary Inductance		1.5		mH
R_P	Coil Primary Resistance (25°C)		0.4		Ω
R_{LOAD}	Load Resistance (for delay time measurements)		2		Ω

Functional operation above the stresses listed in the Recommended Operating Ranges is not implied. Extended exposure to stresses beyond the Recommended Operating Ranges limits may affect device reliability.
1. **onsemi** does not recommend exceeding them or designing to Absolute Maximum Ratings.

ELECTRICAL CHARACTERISTICS

Symbol	Parameter	Conditions	Min.	Typ.	Max.	Unit
POWER SUPPLY CONDITIONS V_{BAT} = 6 to 28 V ; T_J = −40°C to 150°C (unless otherwise specified)						
V_{BAT1}	Operating voltage	Coil switching function	4		28	V
V_{BAT2}	Operating voltage	All functions	6		28	V
I_{BAT}	Supply current	T_J = 150 °C, V_{BAT} = 28 V, RA open, Input = 5 V			5	mA
V_{CLAMP}	$V_{BATTERY}$ clamp	I_{BATT} = 10 mA	35		50	V
SENSE PIN CONDITIONS V_{BAT} = 6 to 28 V ; T_J = −40°C to 150 °C (unless otherwise specified)						
V_{LIMIT}	Sense Voltage at current limit	V_{BAT} > 8 V	185		215	mV
		6 V < V_{BAT} < 8 V	170			
T_{SPIKE}	Input spike filter	Delay on rising and falling edge of Input		13		μs
T_{D1}	Turn on delay time	50% at the input to 10% change at the output		15		μs
T_{D2}	Turn off delay time	50% at the input to 10% change at the output		15		μs
INPUT CONTROL CONDITIONS V_{BAT} = 6 to 28 V; T_J = −40°C to + 150°C (unless otherwise specified)						
V_{INL}	Input low voltage		1.2		1.7	V
V_{INH}	Input high voltage		1.5		2	V
V_{INHys}	Input voltage hysteresis		0.25		0.6	V
I_{IN}	Input current (see Figure 6)		0.5		15	mA
GATE OUTPUT VOLTAGE MAX V_{BAT} = 6 to 28 V; T_J = −40°C to 150°C (unless otherwise specified)						
V_{GMAX}	Vgate max	16 KΩ pulldown resistor	4.5	5.25	6	V
V_{GLOW}	Vgate low	(0 mA < I_{GATE} < 0.4 mA @ T = 25°C)	0.0		0.2	V
DIAGNOSTIC FUNCTIONS AND PROTECTION V_{BAT} = 6 to 28 V ; T_J = −40°C to 150°C (unless otherwise specified)						
RA	Resistor for input reference current		5.2		200	kΩ
$CSSD_{MIN}$	Minimum dwell time capacitor	Note 2		10		nF
TD_{MAX}	Maximum dwell time	(CSSD = 50 nF)	30		60	ms
I_{SLEW}	Soft−Shut−Down slew rate	(I_C: 80−20% I_{Clim})	0.7	1.5	2.5	A/ms
I_{CSSD1}	CSSD Pin current for TDMAX		0.8	1.25	1.5	μA

Product parametric performance is indicated in the Electrical Characteristics for the listed test conditions, unless otherwise noted. Product performance may not be indicated by the Electrical Characteristics if operated under different conditions.
2. Refer to section Maximum Dwell Time and Soft−Shutdown (SSD)

TYPICAL PERFORMANCE CHARACTERISTICS

Input and Spike Filter

When the input signal voltage reaches V_{INH}, the IGBT will be switched on charging the coil. When the input voltage goes below V_{INL}, the coil current through the IGBT will be turned off. If the FAN1100−F085 is in SSD mode, the input signal control is disabled. After an SSD sequence input control will be re−enabled after the input has reached a valid low. Positive and negative spikes of less than Tspike duration at the input line will be filtered out and will not turn on/off the IGBT.

Maximum Dwell Time and Soft−Shutdown (SSD)

When the IGBT is turned on, a delay timer, dependent on the value of the external CSSD capacitor (see Figure 5), is started. If a valid falling edge has not been received after the time TD_{MAX}, the IGBT will be turned off slowly as shown in Figure 4. The coil current will not exceed a slew rate of typical 1.5 A/ms. (Based on ISL9V3040 Ignition IGBT). If a valid falling edge is received after the time TDMAX, the edge will be ignored and the soft shutdown will be completed. The IGBT cannot be subsequently turned on until a valid rising edge is detected.

If the CSSD capacitor has a value below 2.2 nF or the CSSD pin is shorted to ground, the maximum dwell time and SSD functions are disabled. The maximum dwell time is active for a capacitance value above 10 nF typical. The maxdwell might be indeterminate for capacitance value between 2.2 nF and 10 nF.

The maximum dwell time is also disabled in case the input signal is set to high before or at the same time as the battery voltage. It is recommended to apply the battery voltage typically 50 μs before the input signal goes high.

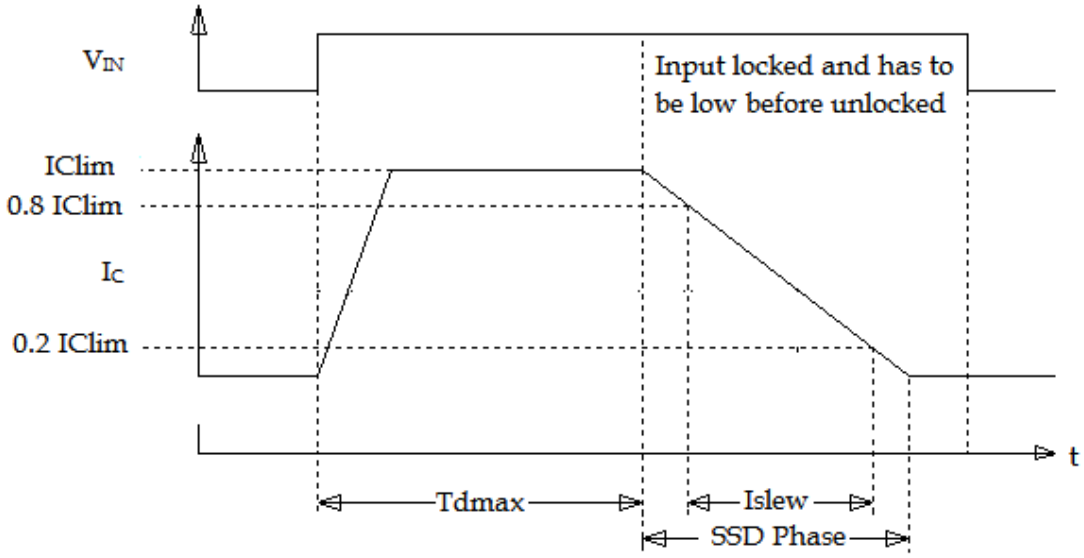

Figure 4. Dwell Time and Soft−Shut−Down

Figure 5 shows the Relationship between the CSSD capacitor and Max Dwell Time

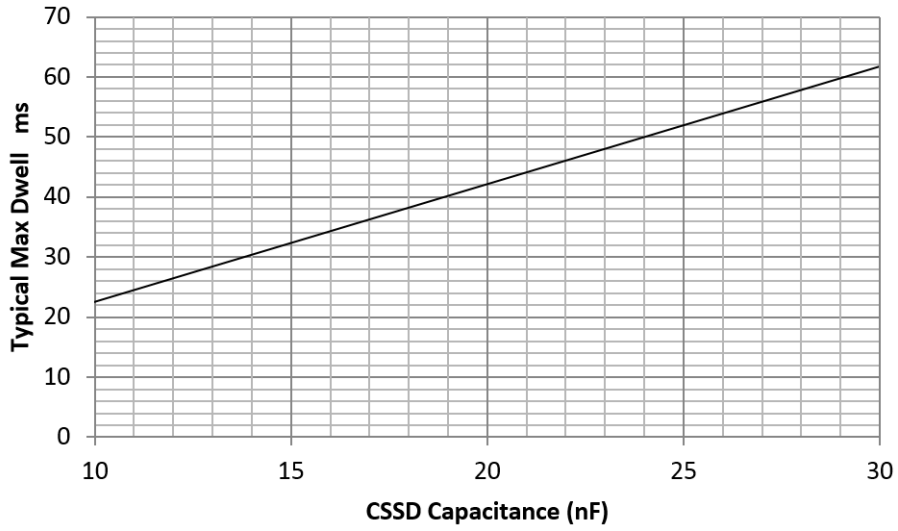

Figure 5. T_{DMAX} as Function of External CSSD Capacitor

Figure 6 shows the Signal input current vs. IRA current

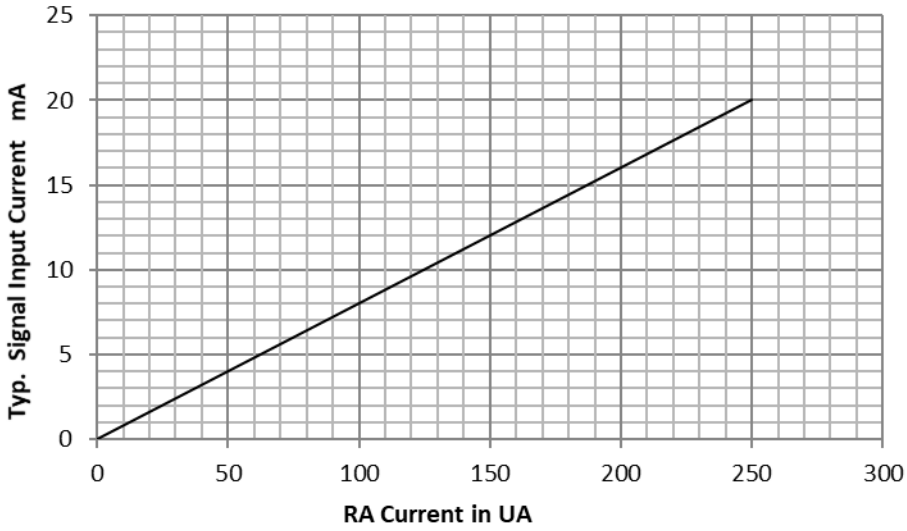

Figure 6. Interrelationship between Signal Input Current and IRA

SOIC8
CASE 751EB
ISSUE A

DATE 24 AUG 2017

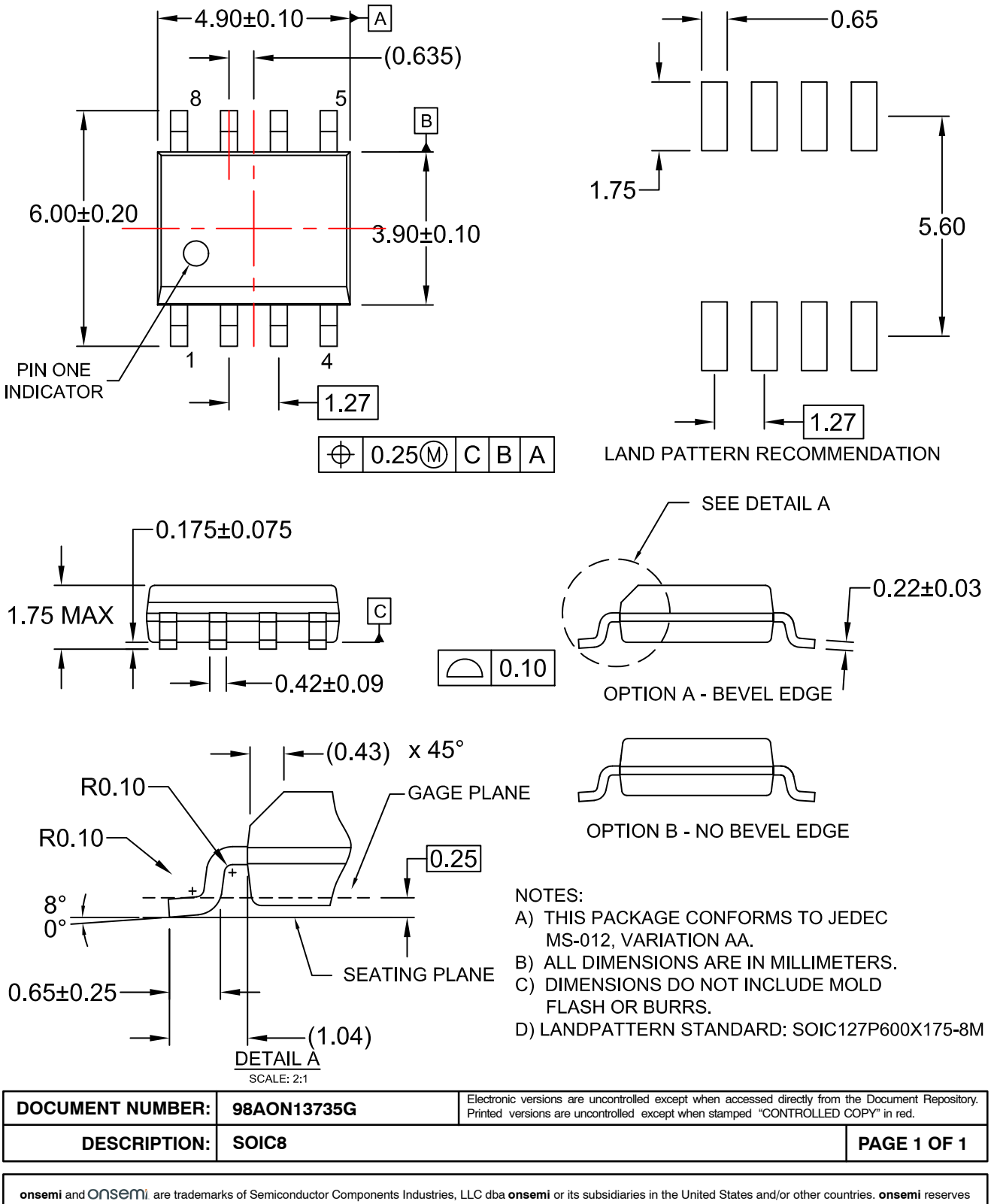

NOTES:
A) THIS PACKAGE CONFORMS TO JEDEC MS-012, VARIATION AA.
B) ALL DIMENSIONS ARE IN MILLIMETERS.
C) DIMENSIONS DO NOT INCLUDE MOLD FLASH OR BURRS.
D) LANDPATTERN STANDARD: SOIC127P600X175-8M

DOCUMENT NUMBER:	**98AON13735G**	Electronic versions are uncontrolled except when accessed directly from the Document Repository. Printed versions are uncontrolled except when stamped "CONTROLLED COPY" in red.
DESCRIPTION:	**SOIC8**	**PAGE 1 OF 1**

onsemi and onsemi are trademarks of Semiconductor Components Industries, LLC dba **onsemi** or its subsidiaries in the United States and/or other countries. **onsemi** reserves the right to make changes without further notice to any products herein. **onsemi** makes no warranty, representation or guarantee regarding the suitability of its products for any particular purpose, nor does **onsemi** assume any liability arising out of the application or use of any product or circuit, and specifically disclaims any and all liability, including without limitation special, consequential or incidental damages. **onsemi** does not convey any license under its patent rights nor the rights of others.

onsemi, , and other names, marks, and brands are registered and/or common law trademarks of Semiconductor Components Industries, LLC dba "**onsemi**" or its affiliates and/or subsidiaries in the United States and/or other countries. **onsemi** owns the rights to a number of patents, trademarks, copyrights, trade secrets, and other intellectual property. A listing of **onsemi**'s product/patent coverage may be accessed at www.onsemi.com/site/pdf/Patent−Marking.pdf. **onsemi** reserves the right to make changes at any time to any products or information herein, without notice. The information herein is provided "as−is" and **onsemi** makes no warranty, representation or guarantee regarding the accuracy of the information, product features, availability, functionality, or suitability of its products for any particular purpose, nor does **onsemi** assume any liability arising out of the application or use of any product or circuit, and specifically disclaims any and all liability, including without limitation special, consequential or incidental damages. Buyer is responsible for its products and applications using **onsemi** products, including compliance with all laws, regulations and safety requirements or standards, regardless of any support or applications information provided by **onsemi**. "Typical" parameters which may be provided in **onsemi** data sheets and/or specifications can and do vary in different applications and actual performance may vary over time. All operating parameters, including "Typicals" must be validated for each customer application by customer's technical experts. **onsemi** does not convey any license under any of its intellectual property rights nor the rights of others. **onsemi** products are not designed, intended, or authorized for use as a critical component in life support systems or any FDA Class 3 medical devices or medical devices with a same or similar classification in a foreign jurisdiction or any devices intended for implantation in the human body. Should Buyer purchase or use **onsemi** products for any such unintended or unauthorized application, Buyer shall indemnify and hold **onsemi** and its officers, employees, subsidiaries, affiliates, and distributors harmless against all claims, costs, damages, and expenses, and reasonable attorney fees arising out of, directly or indirectly, any claim of personal injury or death associated with such unintended or unauthorized use, even if such claim alleges that **onsemi** was negligent regarding the design or manufacture of the part. **onsemi** is an Equal Opportunity/Affirmative Action Employer. This literature is subject to all applicable copyright laws and is not for resale in any manner.

ADDITIONAL INFORMATION

TECHNICAL PUBLICATIONS:
Technical Library: www.onsemi.com/design/resources/technical−documentation
onsemi Website: www.onsemi.com

ONLINE SUPPORT: www.onsemi.com/support
For additional information, please contact your local Sales Representative at www.onsemi.com/support/sales