Data sheet



CFP0300-XPBNNCT

CFP Cubic

LEVEL SENSORS

SICK
Sensor Intelligence.

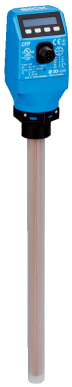

Illustration may differ

Ordering information

Type	part no.
CFP0300-XPBNNCT	1090869

Other models and accessories ➜ www.sick.com/CFP_Cubic

Detailed technical data

Features

Medium	Fluids
Measurement	Switch, Continuous
Probe length	300 mm
Process pressure	–0.5 bar ... 3 bar
Process temperature	–20 °C ... +80 °C
UL approval	✓
RoHS certificate	✓
IO-Link	✓

Performance

Accuracy of sensor element	± 15 mm, with water or oil under reference conditions
Reproducibility	< 5 mm
Resolution	< 2 mm
Response time	< 300 ms
Dielectricity constant	≥ 2
Conductivity	No limitation
Deactivated area at end of probe	7 mm ... 15 mm, Depending on probe length
MTTF	171 years
Display	✓
Temperature measurement	
Measuring range (temperature)	–20 °C ... +80 °C

Measurement accuracy (temperature)	± 2 °C
Resolution (Temperature)	≤ 0.1 °C
Response time (temperature)	120 s

Electronics

Communication interface	IO-Link
Supply voltage	10 V DC ... 30 V DC [1]
Power consumption	≤ 100 mA at 24 V DC without output load
Initialization time	≤ 4 s
Protection class	III
Connection type	M12 round connector x 1, 8-pin
Output signal	4 x PNP/NPN/push-pull transistor outputs switchable and 2 x analog outputs 4 mA ... 20 mA, 0 V ... 10 V depending on output load or output voltage depending on the load
Output load	4 mA ... 20 mA < 500 Ohm at Uv > 15 V, 4 mA ... 20 mA < 350 Ohm at Uv > 12 V, 0 V ... 10 V > 750 Ohm at Uv 14 ≥ V
Hysteresis	Min. 3 mm, min. 2 °C, free adjustable
Output current	< 100 mA
Inductive load	< 1 H
Capacitive load	100 nF
Enclosure rating	IP67
Temperature drift	< 0.1 mm/K
Lower signal level	3.8 mA ... 4 mA
Upper signal level	20 mA ... 20.5 mA
Resolution of analog output	12 bit

[1] All connections are polarity protected. All outputs are overload and short-circuit protected.

Mechanics

Wetted parts	Outer tube: polypropylene (PP-H) G ¾" and ¾" NPT: PPSU Easy-clamp bracket: PP
Process connection	¾" NPT
Housing material	PBT / PC
Max. probe load	≤ 4 Nm
Probe diameter	16 mm

Ambient data

Ambient operating temperature	–20 °C ... +60 °C
Ambient temperature, storage	–40 °C ... +80 °C

Certificates

EU declaration of conformity	✓
UK declaration of conformity	✓
ACMA declaration of conformity	✓
Moroccan declaration of conformity	✓
China-RoHS	✓
cULus certificate	✓

IO-Link	✓

Classifications

ECLASS 5.0	27200503
ECLASS 5.1.4	27200503
ECLASS 6.0	27200503
ECLASS 6.2	27200503
ECLASS 7.0	27200503
ECLASS 8.0	27200503
ECLASS 8.1	27200503
ECLASS 9.0	27200503
ECLASS 10.0	27200503
ECLASS 11.0	27200503
ECLASS 12.0	27200503
ETIM 5.0	EC001447
ETIM 6.0	EC001447
ETIM 7.0	EC001447
ETIM 8.0	EC001447
UNSPSC 16.0901	41113710

Dimensional drawing

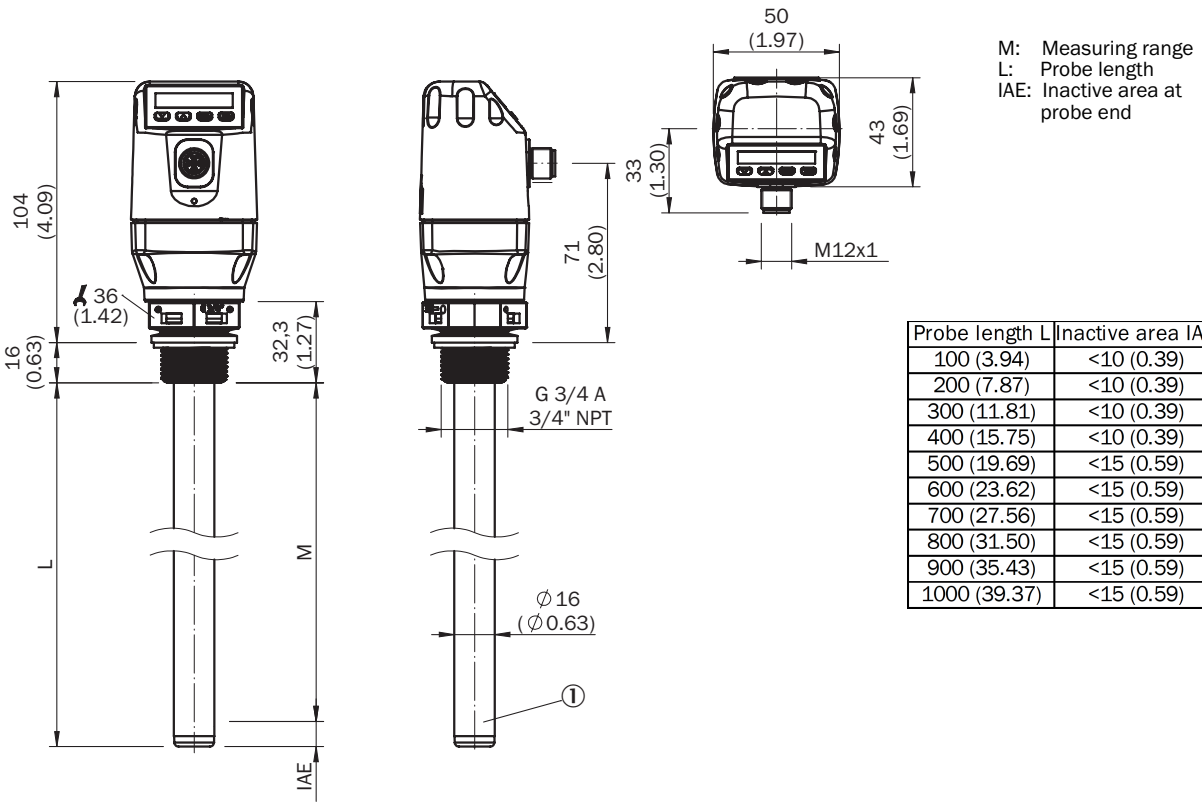

M: Measuring range
L: Probe length
IAE: Inactive area at probe end

Probe length L	Inactive area IAE
100 (3.94)	<10 (0.39)
200 (7.87)	<10 (0.39)
300 (11.81)	<10 (0.39)
400 (15.75)	<10 (0.39)
500 (19.69)	<15 (0.59)
600 (23.62)	<15 (0.59)
700 (27.56)	<15 (0.59)
800 (31.50)	<15 (0.59)
900 (35.43)	<15 (0.59)
1000 (39.37)	<15 (0.59)

Dimensions in mm (inch)

Connection type

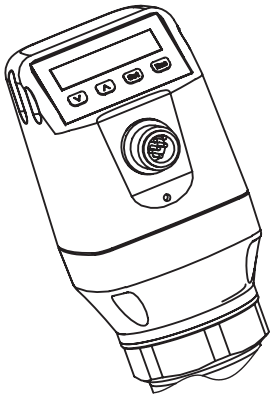

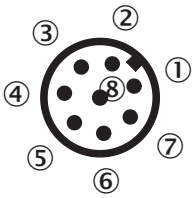

① L^+: Supply voltage
② Q_2: Switching output 2, PNP/NPN/DRV (Push-Pull)
③ M: Ground, reference ground for current-/voltage output
④ C/Q1: Switching output 2, PNP/NPN/DRV (Push-Pull) / IO-Link
⑤ Q_3: Switching output 3, PNP/NPN/DRV (Push-Pull)
⑥ Q_4: Switching output 4, PNP/NPN/DRV (Push-Pull)
⑦ Q_A: Analog current-/voltage output
⑧ Q_B: Analog current-/voltage output

Recommended accessories

Other models and accessories ➜ www.sick.com/CFP_Cubic

	Brief description	Type	part no.
network devices			
		IOLA2US-01101 (SiLink2 Master)	1061790
signal transmitters			
	• **Description:** IO-Link signal lamp • **Enclosure rating:** IP65	SLT060-0B010J700	6075938

	Brief description	Type	part no.
connectors and cables			
	• **Connection type head A:** Female connector, M12, 8-pin, straight, A-coded • **Connection type head B:** Flying leads • **Signal type:** Sensor/actuator cable • **Cable:** 2 m, 8-wire, PVC • **Description:** Sensor/actuator cable, shielded • **Application:** Zones with chemicals, Uncontaminated zones	YF2A28-020VA6XLEAX	2096243
	• **Connection type head A:** Female connector, M12, 8-pin, straight, A-coded • **Connection type head B:** Flying leads • **Signal type:** Sensor/actuator cable • **Cable:** 5 m, 8-wire, PVC • **Description:** Sensor/actuator cable, shielded • **Application:** Zones with chemicals, Uncontaminated zones	YF2A28-050VA6XLEAX	2096244
	• **Connection type head A:** Female connector, M12, 8-pin, straight, A-coded • **Connection type head B:** Flying leads • **Signal type:** Sensor/actuator cable • **Cable:** 2 m, 8-wire, PUR, halogen-free • **Description:** Sensor/actuator cable, unshielded • **Application:** Uncontaminated zones, Zones with oils and lubricants, Robot, Drag chain operation	YF2A18-020UA5XLEAX	2095652
	• **Connection type head A:** Female connector, M12, 8-pin, straight, A-coded • **Connection type head B:** Flying leads • **Signal type:** Sensor/actuator cable • **Cable:** 5 m, 8-wire, PUR, halogen-free • **Description:** Sensor/actuator cable, unshielded • **Application:** Uncontaminated zones, Zones with oils and lubricants, Robot, Drag chain operation	YF2A18-050UA5XLEAX	2095653
	• **Connection type head A:** Female connector, M12, 8-pin, straight, A-coded • **Connection type head B:** Flying leads • **Signal type:** Sensor/actuator cable • **Cable:** 10 m, 8-wire, PVC • **Description:** Sensor/actuator cable, shielded • **Application:** Zones with chemicals, Uncontaminated zones	YF2A28-100VA6XLEAX	2096245
	• **Connection type head A:** Female connector, M12, 8-pin, straight, A-coded • **Connection type head B:** Flying leads • **Signal type:** Sensor/actuator cable • **Cable:** 10 m, 8-wire, PUR, halogen-free • **Description:** Sensor/actuator cable, unshielded • **Application:** Uncontaminated zones, Zones with oils and lubricants, Robot, Drag chain operation	YF2A18-100UA5XLEAX	2095654
	• **Connection type head A:** Female connector, M12, 8-pin, angled, A-coded • **Connection type head B:** Flying leads • **Signal type:** Sensor/actuator cable • **Cable:** 2 m, 8-wire, PVC • **Description:** Sensor/actuator cable, shielded • **Application:** Zones with chemicals, Uncontaminated zones	YG2A28-020VA6XLEAX	2096218
	• **Connection type head A:** Female connector, M12, 8-pin, angled, A-coded • **Connection type head B:** Flying leads • **Signal type:** Sensor/actuator cable • **Cable:** 2 m, 8-wire, PUR, halogen-free • **Description:** Sensor/actuator cable, unshielded • **Application:** Uncontaminated zones, Zones with oils and lubricants, Robot, Drag chain operation	YG2A18-020UA5XLEAX	2095779
	• **Connection type head A:** Female connector, M12, 8-pin, angled, A-coded • **Connection type head B:** Flying leads • **Signal type:** Sensor/actuator cable • **Cable:** 5 m, 8-wire, PVC • **Description:** Sensor/actuator cable, shielded • **Application:** Zones with chemicals, Uncontaminated zones	YG2A28-050VA6XLEAX	2096219
	• **Connection type head A:** Female connector, M12, 8-pin, angled, A-coded • **Connection type head B:** Flying leads • **Signal type:** Sensor/actuator cable • **Cable:** 5 m, 8-wire, PUR, halogen-free • **Description:** Sensor/actuator cable, unshielded • **Application:** Uncontaminated zones, Zones with oils and lubricants, Robot, Drag chain operation	YG2A18-050UA5XLEAX	2095780
	• **Connection type head A:** Female connector, M12, 8-pin, angled, A-coded • **Connection type head B:** Flying leads • **Signal type:** Sensor/actuator cable • **Cable:** 10 m, 8-wire, PUR, halogen-free • **Description:** Sensor/actuator cable, unshielded	YG2A18-100UA5XLEAX	2095781

	Brief description	Type	part no.
	• **Application:** Uncontaminated zones, Zones with oils and lubricants, Robot, Drag chain operation		
	• **Connection type head A:** Female connector, M12, 8-pin, angled, A-coded • **Connection type head B:** Flying leads • **Signal type:** Sensor/actuator cable • **Cable:** 0.5 m, 8-wire, PVC • **Description:** Sensor/actuator cable, shielded • **Application:** Zones with chemicals, Uncontaminated zones	YG2A28-C50VA6XLEAX	2145694
	• **Connection type head A:** Female connector, M12, 8-pin, straight, A-coded • **Connection type head B:** Flying leads • **Signal type:** Sensor/actuator cable • **Cable:** 3 m, 8-wire, PVC • **Description:** Sensor/actuator cable, shielded • **Application:** Zones with chemicals, Uncontaminated zones	YF2A28-030VA6XLEAX	2145695
	• **Connection type head A:** Female connector, M12, 8-pin, angled, A-coded • **Connection type head B:** Flying leads • **Signal type:** Sensor/actuator cable • **Cable:** 0.6 m, 8-wire, PUR, halogen-free • **Description:** Sensor/actuator cable, unshielded • **Application:** Uncontaminated zones, Zones with oils and lubricants, Robot, Drag chain operation	YG2A18-C60UA5XLEAX	2145381
	• **Connection type head A:** Female connector, M12, 8-pin, angled, A-coded • **Connection type head B:** Flying leads • **Signal type:** Sensor/actuator cable • **Cable:** 1 m, 8-wire, PUR, halogen-free • **Description:** Sensor/actuator cable, unshielded • **Application:** Uncontaminated zones, Zones with oils and lubricants, Robot, Drag chain operation	YG2A18-010UA5XLEAX	2145382
	• **Connection type head A:** Female connector, M12, 8-pin, angled, A-coded • **Connection type head B:** Flying leads • **Signal type:** Sensor/actuator cable • **Cable:** 3 m, 8-wire, PUR, halogen-free • **Description:** Sensor/actuator cable, unshielded • **Application:** Uncontaminated zones, Zones with oils and lubricants, Robot, Drag chain operation	YG2A18-030UA5XLEAX	2145383
	• **Connection type head A:** Female connector, M12, 8-pin, angled, A-coded • **Connection type head B:** Flying leads • **Signal type:** Sensor/actuator cable • **Cable:** 0.6 m, 8-wire, PVC • **Description:** Sensor/actuator cable, shielded • **Application:** Zones with chemicals, Uncontaminated zones	YG2A28-C60VA6XLEAX	2145388
	• **Connection type head A:** Female connector, M12, 8-pin, angled, A-coded • **Connection type head B:** Flying leads • **Signal type:** Sensor/actuator cable • **Cable:** 1 m, 8-wire, PVC • **Description:** Sensor/actuator cable, shielded • **Application:** Zones with chemicals, Uncontaminated zones	YG2A28-010VA6XLEAX	2145389
	• **Connection type head A:** Female connector, M12, 8-pin, angled, A-coded • **Connection type head B:** Flying leads • **Signal type:** Sensor/actuator cable • **Cable:** 10 m, 8-wire, PVC • **Description:** Sensor/actuator cable, shielded • **Application:** Zones with chemicals, Uncontaminated zones	YG2A28-100VA6XLEAX	2145391
	• **Connection type head A:** Female connector, M12, 8-pin, angled, A-coded • **Connection type head B:** Flying leads • **Signal type:** Sensor/actuator cable • **Cable:** 3 m, 8-wire, PVC • **Description:** Sensor/actuator cable, shielded • **Application:** Zones with chemicals, Uncontaminated zones	YG2A28-030VA6XLEAX	2145390
	• **Connection type head A:** Female connector, M12, 8-pin, straight, A-coded • **Connection type head B:** Flying leads • **Signal type:** Sensor/actuator cable • **Cable:** 0.6 m, 8-wire, PVC • **Description:** Sensor/actuator cable, shielded • **Application:** Zones with chemicals, Uncontaminated zones	YF2A28-C60VA6XLEAX	2145385
	• **Connection type head A:** Female connector, M12, 8-pin, straight, A-coded • **Connection type head B:** Flying leads • **Signal type:** Sensor/actuator cable • **Cable:** 1 m, 8-wire, PVC • **Description:** Sensor/actuator cable, shielded	YF2A28-010VA6XLEAX	2145386

	Brief description	Type	part no.
	• **Application:** Zones with chemicals, Uncontaminated zones		
	• **Connection type head A:** Female connector, M12, 8-pin, angled, A-coded • **Connection type head B:** Flying leads • **Signal type:** Sensor/actuator cable • **Cable:** 15 m, 8-wire, PUR, halogen-free • **Description:** Sensor/actuator cable, unshielded • **Application:** Uncontaminated zones, Zones with oils and lubricants, Robot, Drag chain operation	YG2A18-150UA5XLEAX	2149335

SICK AT A GLANCE

SICK is one of the leading manufacturers of intelligent sensors and sensor solutions for industrial applications. A unique range of products and services creates the perfect basis for controlling processes securely and efficiently, protecting individuals from accidents and preventing damage to the environment.

We have extensive experience in a wide range of industries and understand their processes and requirements. With intelligent sensors, we can deliver exactly what our customers need. In application centers in Europe, Asia and North America, system solutions are tested and optimized in accordance with customer specifications. All this makes us a reliable supplier and development partner.

Comprehensive services complete our offering: SICK LifeTime Services provide support throughout the machine life cycle and ensure safety and productivity.

For us, that is “Sensor Intelligence.”

WORLDWIDE PRESENCE:

Contacts and other locations –www.sick.com