T540D107K010CH6510WAFL

T540 HRA, Tantalum, Polymer Tantalum, HRA, 100 uF, 10%, 10 VDC, SMD, Polymer, Molded, High Reliability, C (0.01%/1000 Hrs), 55 mOhms, 7343, 3.1mm

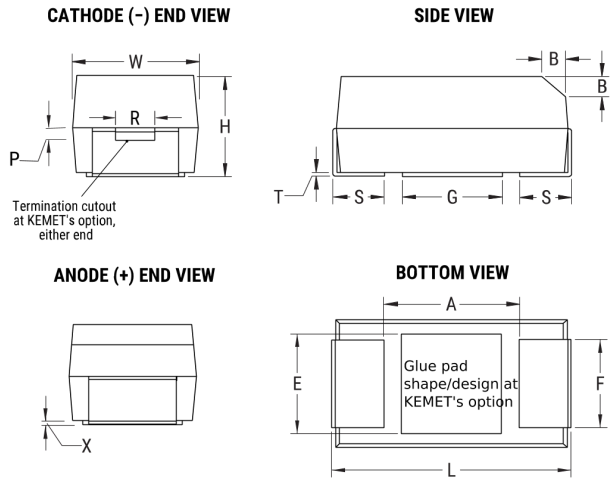

Click here for the 3D model.

Dimensions

Footprint	7343
L	7.3mm +/-0.3mm
W	4.3mm +/-0.3mm
H	2.8mm +/-0.3mm
T	0.13mm REF
S	1.3mm +/-0.3mm
F	2.4mm +/-0.1mm
A	3.8mm MIN
B	0.5mm +/-0.15mm
E	3.5mm REF
G	3.5mm REF
P	0.9mm REF
R	1mm REF
X	0.1mm +/-0.1mm

Packaging Specifications

Packaging	Waffle

General Information

Series	T540 HRA
Dielectric	Polymer Tantalum
Style	SMD Chip
Description	SMD, Polymer, Molded, High Reliability
Features	Non-Combustible, Low ESR, High Reliability
RoHS	No
Prop 65	⚠ **WARNING:** Cancer and reproductive harm - http://www.p65warnings.ca.gov.
SCIP Number	b064b03e-bd75-42af-b342-1fe94dec2340
Termination	Tin Lead (SnPb)
AEC-Q200	No
Typical Component Weight	352.36 mg
Shelf Life	52 Weeks
MSL	3

Specifications

Capacitance	100 uF
Capacitance Tolerance	10%
Voltage DC	10 VDC (105C), 6.7 VDC (125C)
Temperature Range	-55/+125°C
Rated Temperature	105°C
Life	2000 Hrs (125C)
Humidity	60C, 90% RH, 500 Hours, rated voltage
Dissipation Factor	10% 120Hz 25C
Failure Rate	C (0.01%/1000 Hrs)
ESR	55 mOhms (100kHz 25C)
Ripple Current	2023 mA (rms, 100kHz 45C)
Leakage Current	100 uA (5min 25°C)
Testing and Reliability	4 Cycles At +25C +/-5C Before Voltage Aging

Statements of suitability for certain applications are based on our knowledge of typical operating conditions for such applications, but are not intended to constitute - and we specifically disclaim - any warranty concerning suitability for a specific customer application or use. This Information is intended for use only by customers who have the requisite experience and capability to determine the correct products for their application. Any technical advice inferred from this Information or otherwise provided by us with reference to the use of our products is given gratis, and we assume no obligation or liability for the advice given or results obtained.

© 2006 - 2024 KEMET