NUMBER 316133

3rd ANGLE PROJECTION

METRIC

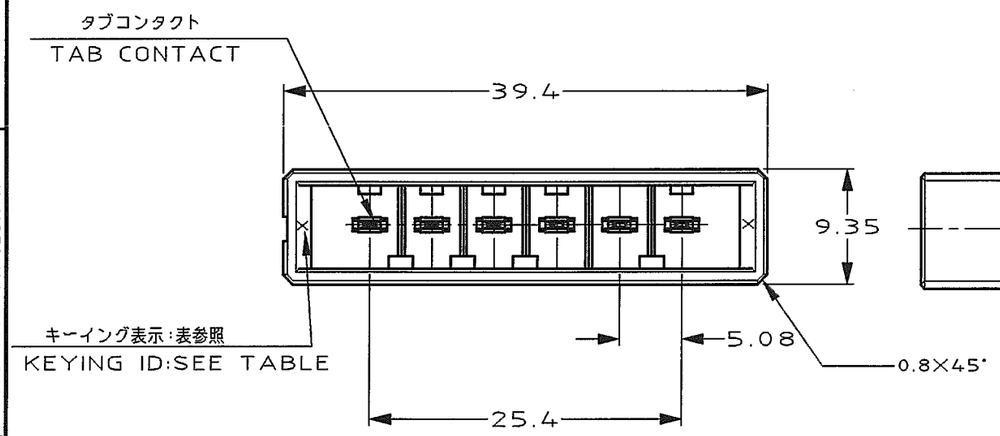


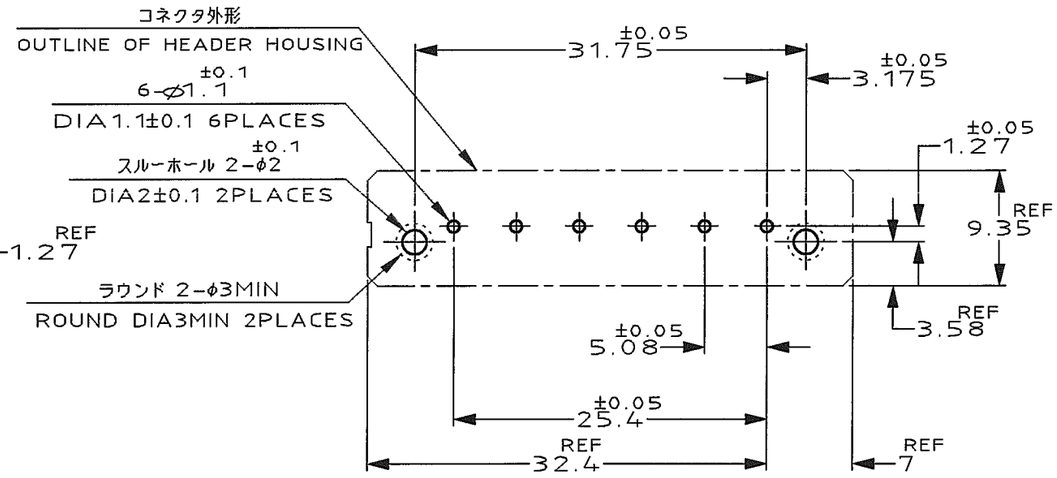


推奨基板取付け穴寸法

PC 基板厚:1.6±0.1
(非累積公差)
(コネクタ搭載面)

RECOMEND PC BOARD HOLE PATTERN

PC BOARD THICKNESS:1.6±0.1
(NOT ACCUMULATE TOLERANCE)
(CONNECTOR MOUNT SIDE)

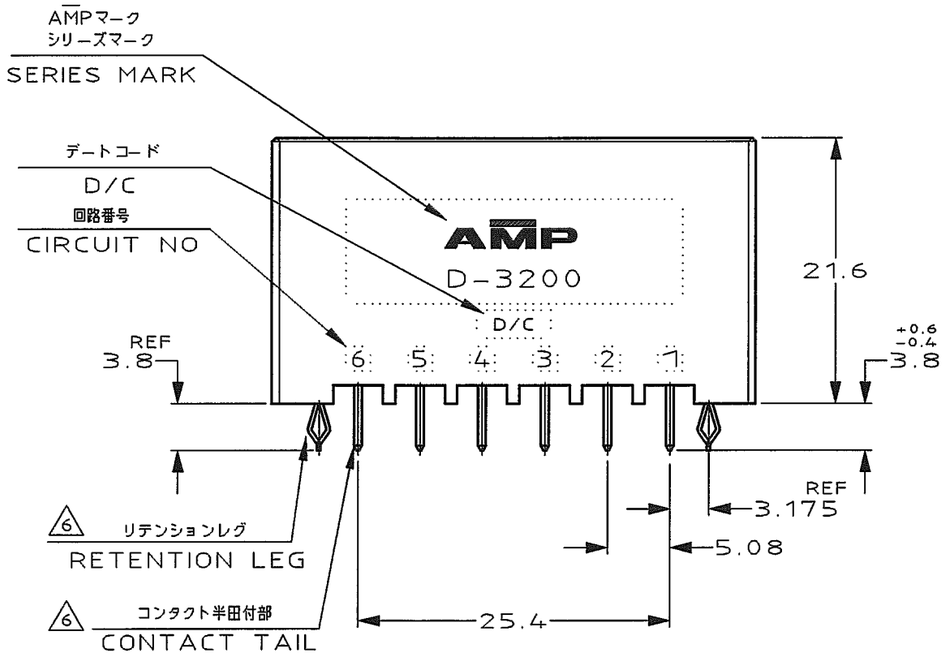


NOTES

1. MATERIAL:HOUSING:GLASS FILED THERMO PLASTIC,POLYESTER(94V-0),COLOR:BLACK
   CONTACT:COPPER ALLOY
   RETENTION LEG:COPPER ALLOY
2. FINISH(CONTACT AREA): 0.38μm PdNi & Au PLATING OVER NICKEL
3. FINISH(CONTACT AREA): 0.76μm PdNi & Au PLATING OVER NICKEL
4. FINISH(CONTACT AREA):2.0 μmMIN TIN PLATED OVER NICKEL
5. ~~FINISH(RETENTION LEG): TIN-LEAD PLATED (CONTACT TAIL) OVER NICKEL~~
6. FINISH(RETENTION LEG): TIN PLATED (CONTACT TAIL) OVER NICKEL

7 OBSOLETE PARTS: OBSOLETE CIS STREAMLINING PER D.RENAUD/D.SINISI

| 7 OBSOLETE | KEYING LOCATION | KEYING | FINISH | PART NO. |
|---|---|---|---|---|
| | | Y | 6 4 | ~~2-316133-5~~ |
| | | | 6 3 | 2-316133-3 |
| | | | 6 2 | 2-316133-2 |
| | | X | 6 4 | 1-316133-5 |
| | | | 6 3 | 1-316133-3 |
| | | | 6 2 | 1-316133-2 |

キーイング 位置

| LTR | REVISION RECORD | DR | CHK | DATE |
|---|---|---|---|---|
| C | REVISED PER ECR-25-250788 | F.Z | R.B | 16JAN 2025 |
| B1 | REV PER ECO-10-000445 | KK | AEG | 11JAN 10 |
| B | REVISED (FJD0-0039-03) | T S | J.M | 6/2 '03 |
| A | REVISED (FJD0-0114-03) | T S | SM | 25.APR '03 |
| 0 | RELEASED (FJ00-2557-95) | K I | Y I | 2/AUG '95 |

Copyright © 1995
AMP(Japan) LTD.
ALL RIGHTS RESERVED.

TE Connectivity

| | |
|---|---|
| WIRE RANGE mm²(AWG - ) | INSULATION DIA - mmφ |
| MATERIAL SEE NOTES 注記参照 | FINISH SEE NOTES 注記参照 |
| DR. 26/JUL/'95 K.IKEDA | DE. 26/JUL/'95 K.IKEDA |
| CHK. 2/AUG/'95 Y.ISHIKAWA | APP. 2/AUG/'95 S.MANABE |

NAME ダイナミック D-3200S 5.08 ピッチ (V) 6 極 ヘッダーアセンブリー
DYNAMIC D-3200S 5.08PITCH(V) 6 POS.HDR CONN.ASS'Y

一般公差 (GENERAL TOLERANCE)
10以下 : ±0.3
10を超え 30以下 : ±0.4
30を超え100以下 : ±0.45
角度 : ±3°

| SIZE | LOC | NUMBER |
|---|---|---|
| A3 | J | C-316133 |

| SCALE | REV | SHEET |
|---|---|---|
| 2-1 | C | 1 OF 1 |

(CUSTOMER DRAWING) 顧客用図面

PRINT DIST

DIMENSIONS IN MILLIMETERS. DO NOT SCALE PRINT

AMP-J
REV.10/'83