RoHS compliant
by exemption

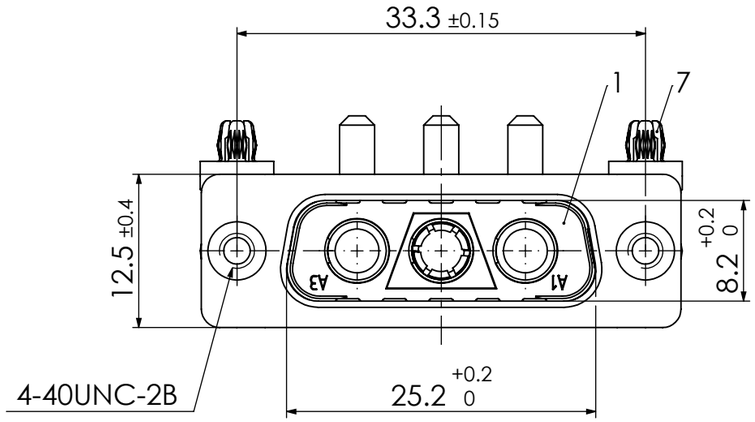

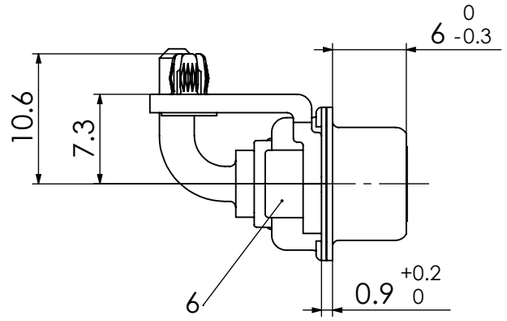

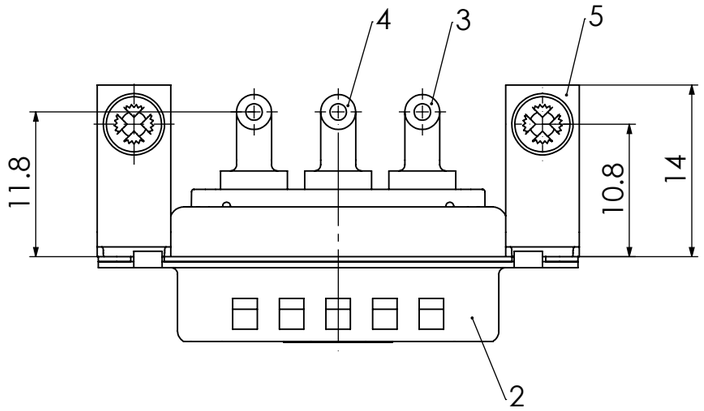

PCB hole pattern, mounting side

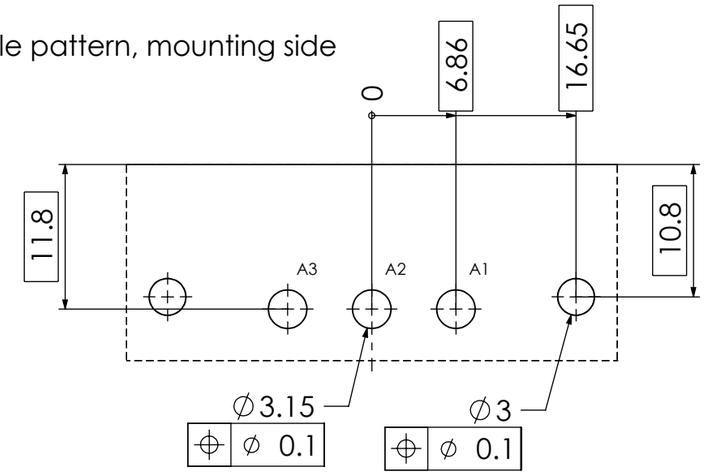

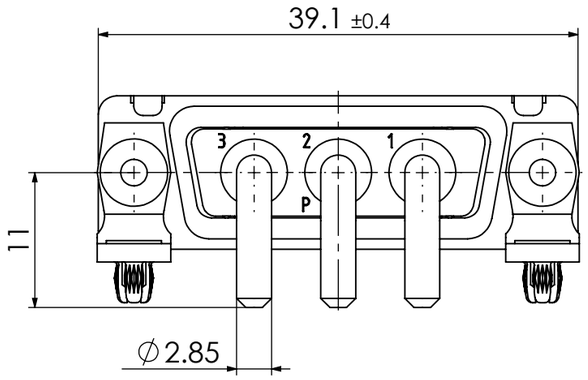

No.	St.	Part	Type Description/Material	Surface plating/Colour/Class
7	2	Snap-in rivet	PCB 1.6mm / Brass	tin plated
6	2	Clinch nut	MW 4-40 / Steel	tin plated
5	2	Bracket	F1080-79 / Steel	tin plated
4	1	High power contact	FMP008S104R	20A
3	2	High power contact	FMP008P104R	20A
2	1	Shell	Steel	tin plated
1	1	Insulator	PCT (-55°C to +130°C) acc. UL94V-0	black

FUNCTIONAL SYMBOLS
= 0
= 0
= 0

THIS DRAWING CONTAINS INFORMATION THAT IS PROPRIETARY TO MOLEX ELECTRONIC TECHNOLOGIES, LLC AND SHOULD NOT BE USED WITHOUT WRITTEN PERMISSION

DIMENSION UNITS: mm
SCALE: 2:1
MEASUREMENTS WITHOUT TOLERANCE ACC. TO: ISO 2768-m

REV.	CH.-NO.
3	24410
2	24130
1	

CURRENT REVISION
DRWN: DRAWN BY mteubel 12-12-2023
APPR: APPR BY msteinbrueck 19-12-2023

INITIAL REVISION
DRWN: DRAWN BY MTeubel 15-03-2011
APPR: APPR BY sschref 16-03-2011

REPLACEMENT FOR: 1731070804_Rev.A1
FRIST ANGLE PROJECTION
DRAWING: A3-SIZE

molex

FCT D-Sub Mixed-Layout Connector

PRODUCT CUSTOMER DRAWING

MATERIAL NUMBER: 1731070804
REVISION: 3
DOCUMENT NUMBER: F3W3PC-4661
CUSTOMER: GENERAL MARKET
SHEET NUMBER: 1 OF 1

COMMENT:
ALL RIGHTS ARE RESERVED BY US FOR THIS DRAWING, WITHOUT OUR PRIOR CONSENT,
IT MAY NEITHER BE DUBLICATED NOR MADE AVAILABLE TO A THIRD PARTY,
AND IT ALSO MAY NOT BE IMPROPERLY USED BY TE RECEIVER, OR A THIRD PARTY.