WR-187 Standard Gain Horn with 20 dBi gain, N Female Connector, Integrated Cage-Style Mount



PE1WAN187-20NF

Features

- 3.95 GHz to 5.85 GHz
- WR-187 Waveguide Band
- 20 dBi Nominal Gain
- N Female Connector
- Ruggedized Aluminum Cage-Style Mount

Applications

- Antenna Measurements
- Wireless Communication
- Laboratory Use
- Microwave Radio Systems
- Radome Testing
- Automotive Antenna Test Solutions
- Radar Cross Section
- Satellite Antenna Testing

Description

The PE1WAN187-20NF standard gain horn antenna (also known as waveguide horn) from Pasternack is part of our comprehensive selection of waveguide antennas. The cage-style mount is a ruggedized aluminum mounting solution that integrates with test and measurement positioning systems, ensuring precise alignment and protection of the antenna. This standard gain horn is mated with a WR-187 to N Female waveguide to coaxial adapter and operates from 3.95 GHz to 5.85 GHz.

Our PE1WAN187-20NF standard gain horn antenna with integrated cage-style mount has a nominal gain of 20 dBi with a Horizontal and Vertical HPBW (Half Power Beam Width) of 17.5 dB and 17.3 dB respectively. Pasternack's N Female to WR-187 standard gain horns are available in 10, 15 and 20 dBi models with pyramidal shape and connectorized input.

Waveguide antennas, such as the PE1WAN187-20NF are used in a wide variety of applications due to the high-power handling capability, low loss, high directivity, and near constant electrical performance. Our WR-187 waveguide antennas with N Female interface is part of over 40,000 RF, microwave and millimeter wave components from Pasternack available worldwide and ship same day.

Configuration

Design	WR-187
Coaxial Interface	N Female

Electrical Specifications

Description	Minimum	Typical	Maximum	Units
Frequency Range	3.95		5.85	GHz
Gain		20		
Horizontal Half Power Beam Width		17.5		Degrees
Vertical Half Power Beam Width		17.3		Degrees
Waveguide to Coaxial Adapter				
VSWR			1.3:1	

Mechanical Specifications

Size	
Length	14.23 in [361.44 mm]
Width	6.72 in [170.69 mm]
Height	14.93 in [379.22 mm]
Weight	2.21 lbs [1 kg]

© 2023 Infinite Electronics, Inc. Pasternack is a registered trademark of Infinite Electronics, Inc.
+1 (866) 558-2786 | sales@pasternack.com | pasternack.com

WR-187 Standard Gain Horn with 20 dBi gain, N Female Connector, Integrated Cage-Style Mount



PE1WAN187-20NF

RF Connector

Type	N Female

Waveguide Interface

Waveguide Size	WR-187

Compliance Certifications (see product page for current document)

Plotted and Other Data

Notes:

Typical Performance Data

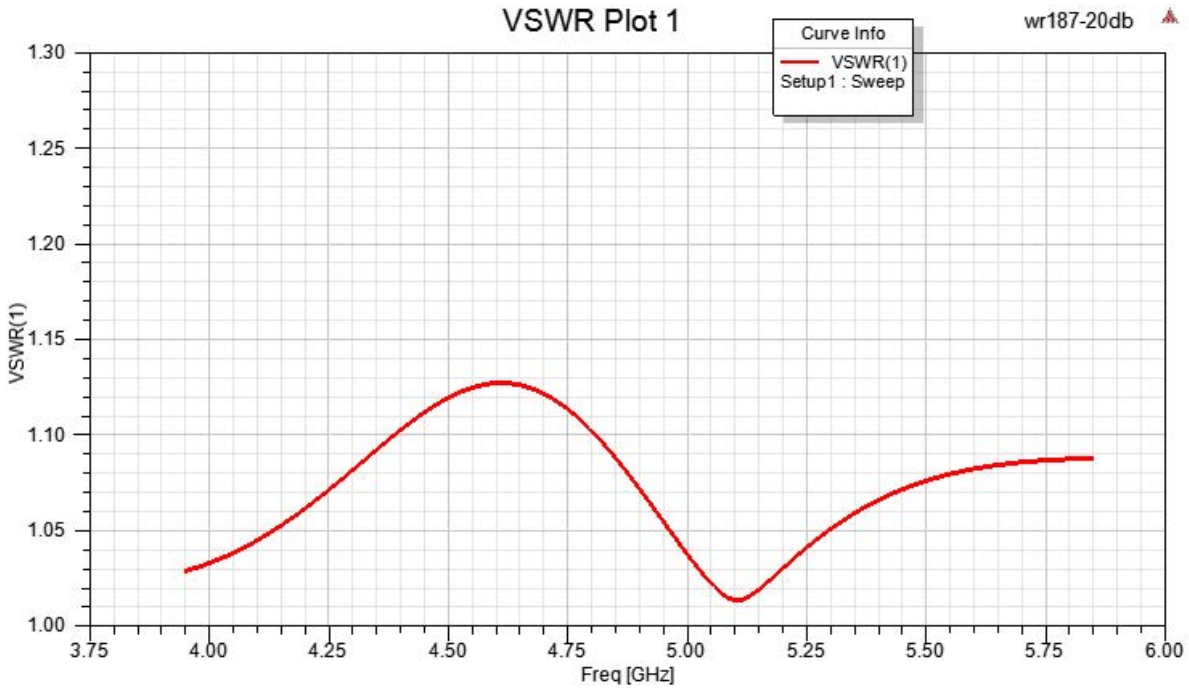

© 2023 Infinite Electronics, Inc. Pasternack is a registered trademark of Infinite Electronics, Inc.
+1 (866) 558-2786 | sales@pasternack.com | pasternack.com

WR-187 Standard Gain Horn with 20 dBi gain, N Female Connector, Integrated Cage-Style Mount



PE1WAN187-20NF

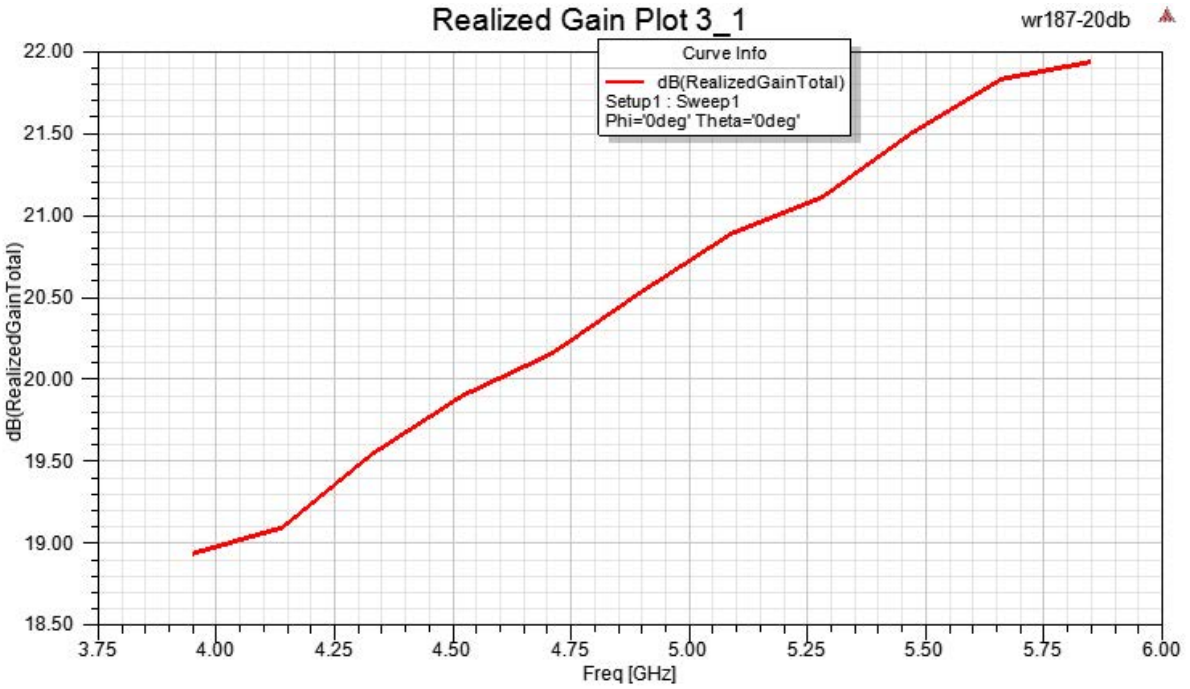

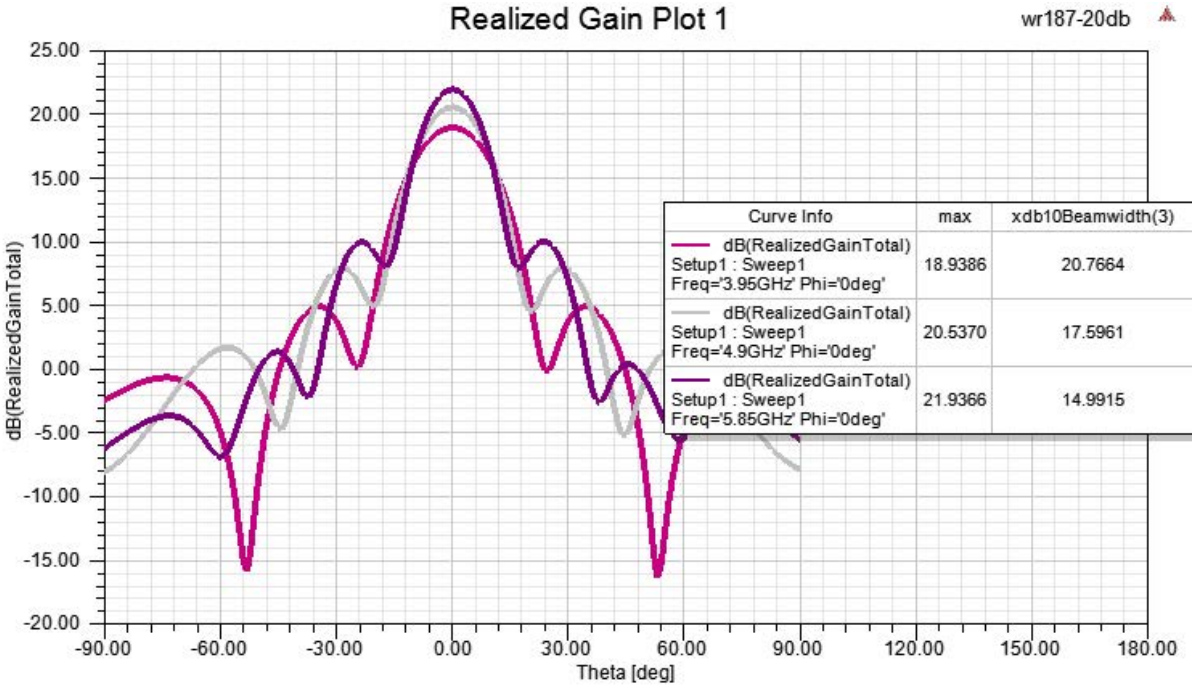

© 2023 Infinite Electronics, Inc. Pasternack is a registered trademark of Infinite Electronics, Inc.
+1 (866) 558-2786 | sales@pasternack.com | pasternack.com

WR-187 Standard Gain Horn with 20 dBi gain, N Female Connector, Integrated Cage-Style Mount



PE1WAN187-20NF

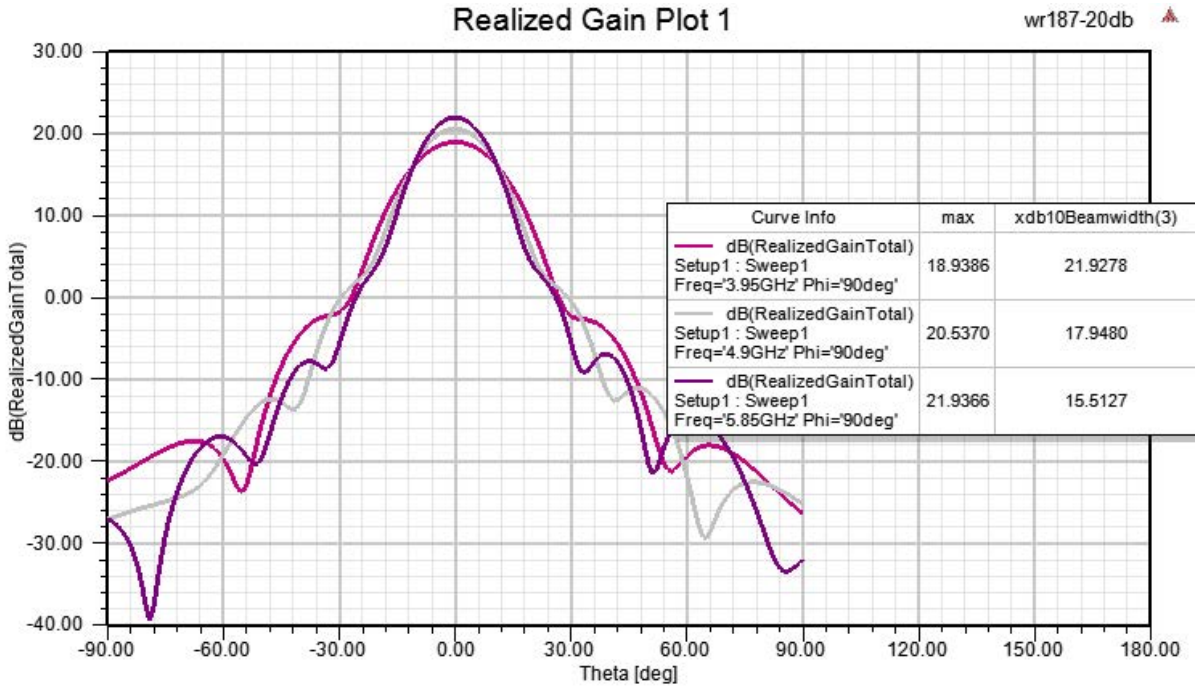

WR-187 Standard Gain Horn with 20 dBi gain, N Female Connector, Integrated Cage-Style Mount from Pasternack Enterprises has same day shipment for domestic and International orders. Our RF, microwave and millimeter wave products maintain a 99.4% availability and are part of the broadest selection in the industry.

Click the following link (or enter part number in "SEARCH" on website) to obtain additional part information including price, inventory and certifications: WR-187 Standard Gain Horn with 20 dBi gain, N Female Connector, Integrated Cage-Style Mount PE1WAN187-20NF

URL: https://www.pasternack.com/wr-187-waveguide-standard-gain-horn-antenna-20-dbi-n-pe1wan187-20nf-p.aspx

The information contained within this document is accurate to the best of our knowledge and representative of the part described herein. It may be necessary to make modifications to the part and/or the documentation of the part in order to impliment improvements. Pasternack Enterprises reserves the right to make such changes as required. Unless otherwise stated, all specifications are nominal. Pasternack Enterprises does not make any representation or warranty regarding the suitability of the part described herein for any particular purpose, and Pasternack Enterprises does not assume liability arising out of the use of any part or document.

© 2023 Infinite Electronics, Inc. Pasternack is a registered trademark of Infinite Electronics, Inc.

PE1WAN187-20NF CAD Drawing

WR-187 Standard Gain Horn with 20 dBi gain, N Female Connector, Integrated Cage-Style Mount

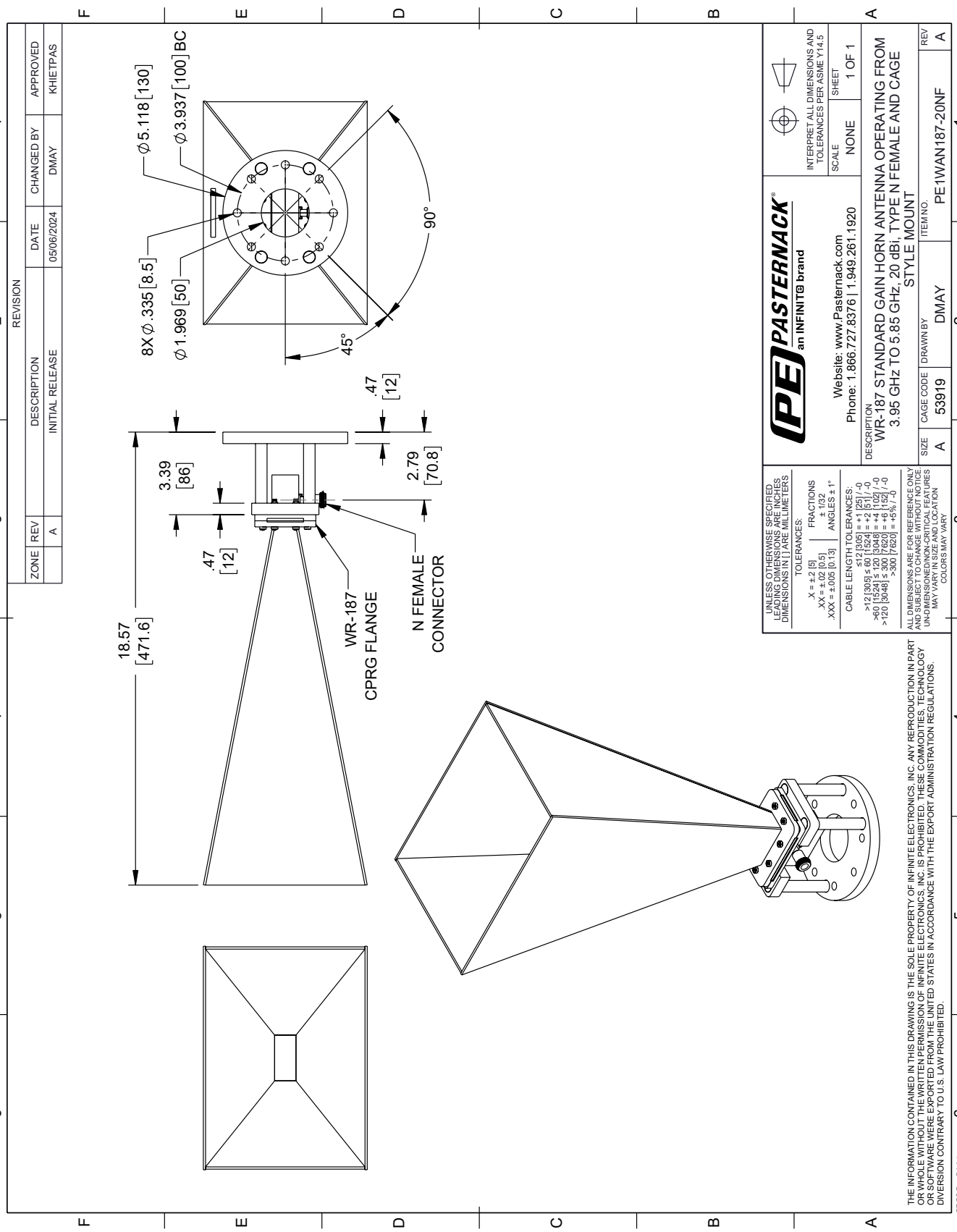

© 2023 Infinite Electronics, Inc. Pasternack is a registered trademark of Infinite Electronics, Inc.