HC-A16-I-CT-M - Contact insert

1585430

https://www.phoenixcontact.com/us/products/1585430

Please be informed that the data shown in this PDF document is generated from our online catalog. Please find the complete data in the user documentation. Our general terms of use for downloads are valid.

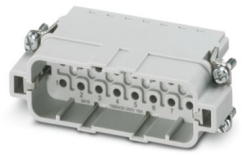

Contact insert, number of positions: 16+PE, size: D25, number of connections per position: 1, Pin, Crimp connection, 250 V, 16 A, 0.5 mm^2 ... 4 mm^2

Commercial data

Item number	1585430
Packing unit	1 pc
Minimum order quantity	1 pc
Sales key	BF61
Product key	BF7ABB
GTIN	4046356285162
Weight per piece (including packing)	32.92 g
Weight per piece (excluding packing)	22.22 g
Customs tariff number	85369010
Country of origin	CN

Technical data

Notes

General	for HC-D25 / HC-D50 housing, crimp contact CK2,5-ED (crimp contacts not included in scope of supply)
General	Connectors may be operated only when there is no load/voltage.

Mounting

Assembly instructions	To ensure correct use, installation in housing with IP54 protection or better is required
	for plastic coding profiles: 4 pcs.

Product properties

Product type	Contact insert with a fixed no. of positions
Series	HC-A
Type	D25
	D50
Number of positions	16
Connection profile	16+PE
Contact numbering	1 - 16
Number of connections per position	1
Contact material type	turned

Insulation characteristics

Overvoltage category	III
Degree of pollution	3

Dimensions

Dimensional drawing	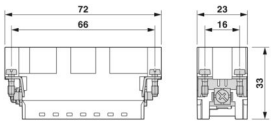
Width	23 mm
Height	33 mm
Length	72 mm
Drill hole distance, horizontal	66 mm
Drill hole distance, vertical	16 mm

Mechanical characteristics

Contact diameter	2.5 mm

Connection data

Connection technology

Connection technology	Crimp connection

Number of connections per position	1
Connection in acc. with standard	IEC / EN

Conductor connection

Conductor cross section	0.5 mm² ... 4 mm² (applies to stranded conductors)
Connection cross section AWG	20 ... 12
Tightening torque	0.7 Nm ... 1 Nm (PE connection)
	0.5 Nm ... 0.8 Nm (Mounting screws for mounting in the HEAVYCON housing)
Stripping length of the individual wire	8 mm

Electrical properties

Rated voltage (III/3)	250 V
Rated surge voltage	4 kV
Rated current	16 A

Mechanical properties

Mechanical data

Insertion/withdrawal cycles	≥ 500

Material specifications

Contact material	Copper alloy
Contact surface material	Ag (alternatively Au)
Contact carrier material	PC
Standards/regulations	PC: Fire protection in rail vehicles - requirement sets R22, R23, and R24 acc. to DIN EN 45545-2 (Risk level HL1 - HL3)

Environmental and real-life conditions

Ambient conditions

Ambient temperature (operation)	-40 °C ... 125 °C (including heating up of contacts)

Standards and regulations

Testing

Standards/regulations	PC: Fire protection in rail vehicles - requirement sets R22, R23, and R24 acc. to DIN EN 45545-2 (Risk level HL1 - HL3)

Drawings

Diagram

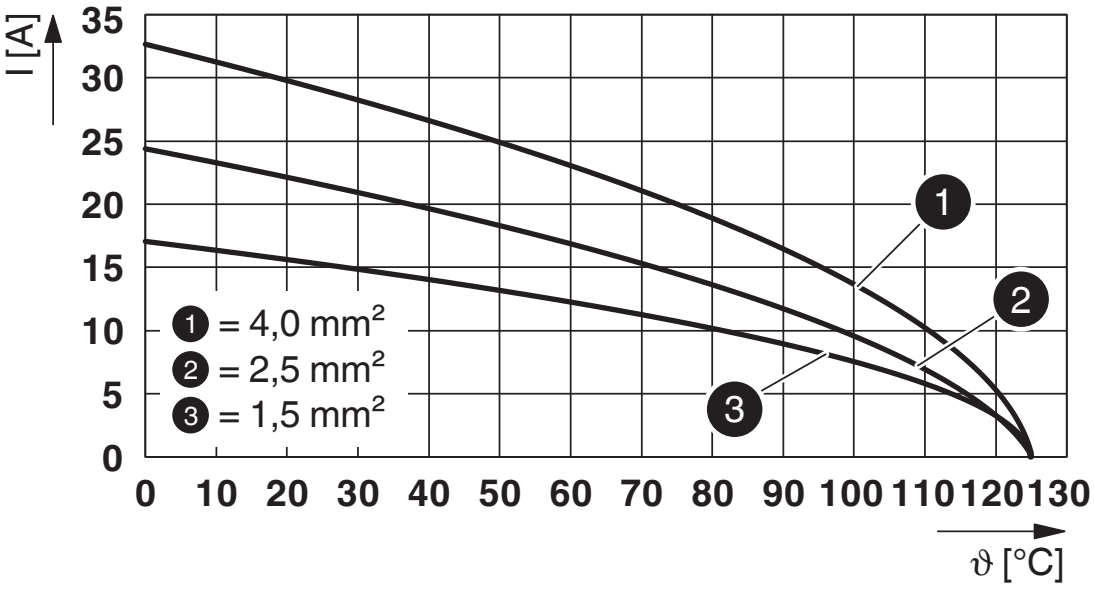

Derating diagram

Dimensional drawing

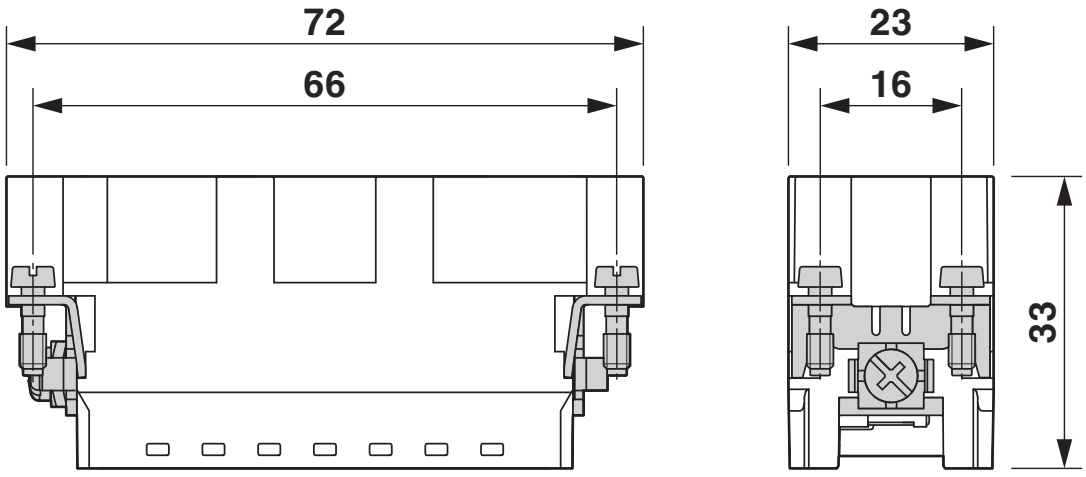

Male insert

Dimensional drawing

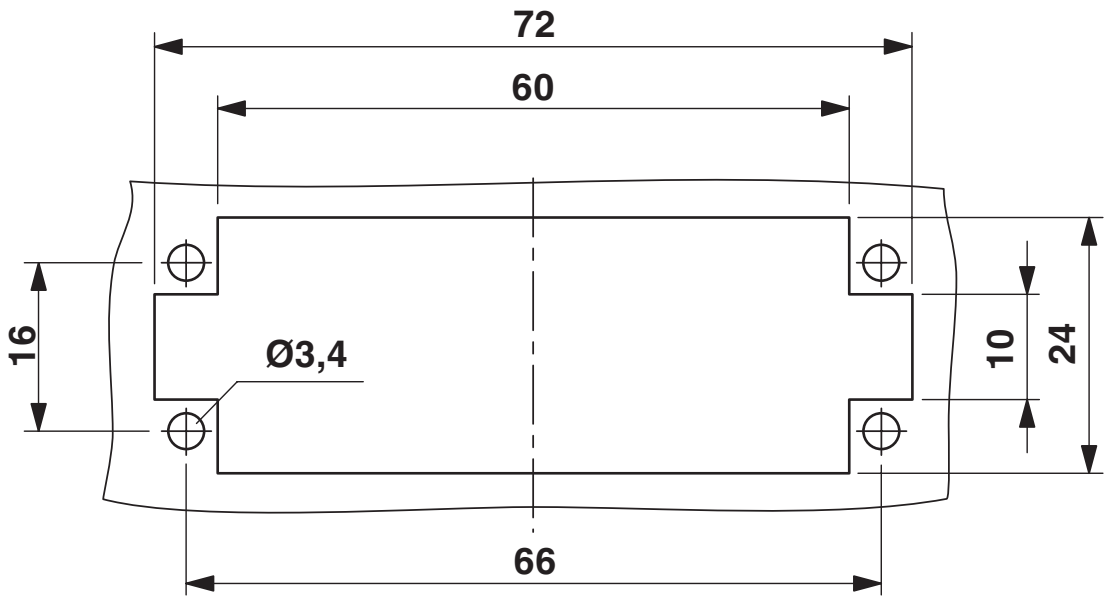

Mounting cutout

Schematic diagram

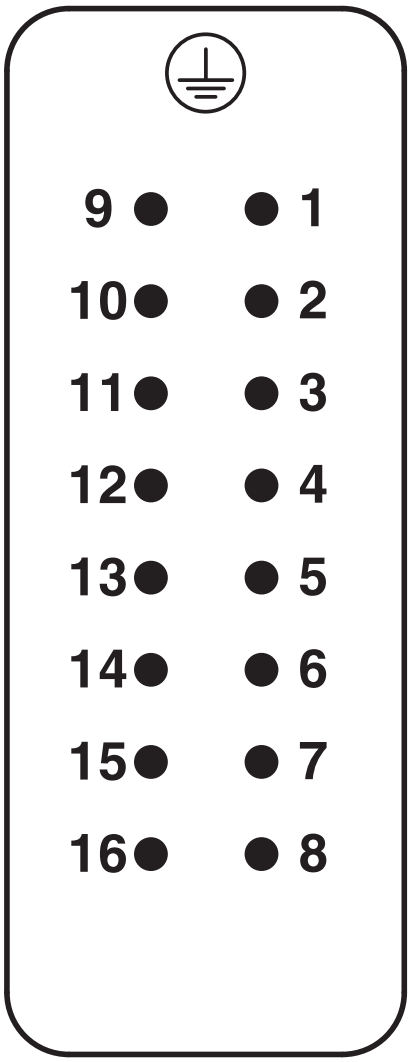

Connector pin assignment, connection side

Approvals

To download certificates, visit the product detail page: https://www.phoenixcontact.com/us/products/1585430

DNV
Approval ID: TAE000037S

CSA
Approval ID: 013631_6233_01

	Nominal voltage U_N	Nominal current I_N	Cross section AWG	Cross section mm^2
	250 V	16 A	- 12	-

EAC
Approval ID: RU C-DE.BL08.B.00511

cULus Recognized
Approval ID: E468743

	Nominal voltage U_N	Nominal current I_N	Cross section AWG	Cross section mm^2
	250 V	16 A	- 12	-

Classifications

ECLASS

ECLASS-11.0	27440205
ECLASS-12.0	27440205
ECLASS-13.0	27440205

ETIM

ETIM 8.0	EC000438

UNSPSC

UNSPSC 21.0	39121500

Environmental product compliance

EU RoHS

Fulfills EU RoHS substance requirements	Yes, No exemptions

China RoHS

Environment friendly use period (EFUP)	EFUP-E
	No hazardous substances above the limits

EU REACH SVHC

REACH candidate substance (CAS No.)	No substance above 0.1 wt%

Accessories

CP-HC-S - Coding profile

1410916

https://www.phoenixcontact.com/us/products/1410916

Coding profile, for contact inserts HC-BB... / HC-A10... / HC-A16...



HC-CB - Coding bolt

1772722

https://www.phoenixcontact.com/us/products/1772722

Coding pin, prevents mismating of up to six connectors with an identical number of positions



HC-CST - Coding element

1676857

https://www.phoenixcontact.com/us/products/1676857



Coding peg for coding up to 16 connectors

HC-CBU - Coding element

1676860

https://www.phoenixcontact.com/us/products/1676860



Coding socket for coding up to 16 connectors

HC-A-PES - Screw

1584868

https://www.phoenixcontact.com/us/products/1584868



PE screw for contact inserts of A series

CK2,5-ED-0,50ST AG - Crimp contact

1663572

https://www.phoenixcontact.com/us/products/1663572



Crimp contact, contact diameter: 2.5 mm, turned, Pin, contact material: Copper alloy, contact surface: silver-plated, connection cross section: 0.5 mm^2 ... 0.5 mm^2, AWG 20

CK2,5-ED-0,75ST AG - Crimp contact

1663585

https://www.phoenixcontact.com/us/products/1663585



Crimp contact, contact diameter: 2.5 mm, turned, Pin, contact material: Copper alloy, contact surface: silver-plated, connection cross section: 0.75 mm^2 ... 0.75 mm^2, AWG 18

CK2,5-ED-1,00ST AG - Crimp contact

1663598

https://www.phoenixcontact.com/us/products/1663598



Crimp contact, contact diameter: 2.5 mm, turned, Pin, contact material: Copper alloy, contact surface: silver-plated, connection cross section: 0.75 mm^2 ... 1 mm^2, AWG 18

CK2,5-ED-1,50ST AG - Crimp contact

1663608

https://www.phoenixcontact.com/us/products/1663608



Crimp contact, contact diameter: 2.5 mm, turned, Pin, contact material: Copper alloy, contact surface: silver-plated, connection cross section: 1.5 mm^2 ... 1.5 mm^2, AWG 16

CK2,5-ED-2,50ST AG - Crimp contact

1663611

https://www.phoenixcontact.com/us/products/1663611



Crimp contact, contact diameter: 2.5 mm, turned, Pin, contact material: Copper alloy, contact surface: silver-plated, connection cross section: 2.5 mm^2 ... 2.5 mm^2, AWG 14

CK2,5-ED-3,00ST AG - Crimp contact

1663624

https://www.phoenixcontact.com/us/products/1663624



Crimp contact, contact diameter: 2.5 mm, turned, Pin, contact material: Copper alloy, contact surface: silver-plated, connection cross section: 3 mm^2 ... 3 mm^2, AWG 12

CK2,5-ED-4,00ST AG - Crimp contact

1663637

https://www.phoenixcontact.com/us/products/1663637



Crimp contact, contact diameter: 2.5 mm, turned, Pin, contact material: Copper alloy, contact surface: silver-plated, connection cross section: 4 mm^2 ... 4 mm^2, AWG 12

CK2,5-ED-0,50M AG - Crimp contact

1273667

https://www.phoenixcontact.com/us/products/1273667



Crimp contact, contact diameter: 2.5 mm, turned, Pin, contact material: Copper alloy, lead-free, contact surface: silver-plated, connection cross section: 0.5 mm^2 ... 0.5 mm^2, AWG 20

CK2,5-ED-0,75M AG - Crimp contact

1273666

https://www.phoenixcontact.com/us/products/1273666



Crimp contact, contact diameter: 2.5 mm, turned, Pin, contact material: Copper alloy, lead-free, contact surface: silver-plated, connection cross section: 0.75 mm^2 ... 0.75 mm^2, AWG 18

CK2,5-ED-1,00M AG - Crimp contact

1273665

https://www.phoenixcontact.com/us/products/1273665



Crimp contact, contact diameter: 2.5 mm, turned, Pin, contact material: Copper alloy, lead-free, contact surface: silver-plated, connection cross section: 1 mm^2 ... 1 mm^2, AWG 18

CK2,5-ED-1,50M AG - Crimp contact

1273664

https://www.phoenixcontact.com/us/products/1273664



Crimp contact, contact diameter: 2.5 mm, turned, Pin, contact material: Copper alloy, lead-free, contact surface: silver-plated, connection cross section: 1.5 mm^2 ... 1.5 mm^2, AWG 16

CK2,5-ED-2,50M AG - Crimp contact

1273663

https://www.phoenixcontact.com/us/products/1273663



Crimp contact, contact diameter: 2.5 mm, turned, Pin, contact material: Copper alloy, lead-free, contact surface: silver-plated, connection cross section: 2.5 mm^2 ... 2.5 mm^2, AWG 14

CK2,5-ED-3,00M AG - Crimp contact

1273648

https://www.phoenixcontact.com/us/products/1273648



Crimp contact, contact diameter: 2.5 mm, turned, Pin, contact material: Copper alloy, lead-free, contact surface: silver-plated, connection cross section: 3 mm^2 ... 3 mm^2, AWG 12

HC-A16-I-CT-M - Contact insert

1585430

https://www.phoenixcontact.com/us/products/1585430

CK2,5-ED-4,00M AG - Crimp contact

1273620

https://www.phoenixcontact.com/us/products/1273620



Crimp contact, contact diameter: 2.5 mm, turned, Pin, contact material: Copper alloy, lead-free, contact surface: silver-plated, connection cross section: 4 mm^2 ... 4 mm^2, AWG 12

CK2,5-ED-0,37ST AU - Crimp contact

1585663

https://www.phoenixcontact.com/us/products/1585663



Crimp contact, contact diameter: 2.5 mm, turned, Pin, contact material: Copper alloy, contact surface: gold-plated, connection cross section: 0.14 mm^2 ... 0.37 mm^2, AWG 22 ... 26

CK2,5-ED-0,50ST AU - Crimp contact

1674804

https://www.phoenixcontact.com/us/products/1674804



Crimp contact, contact diameter: 2.5 mm, turned, Pin, contact material: Copper alloy, contact surface: gold-plated, connection cross section: 0.5 mm^2 ... 0.5 mm^2, AWG 20

CK2,5-ED-1,00ST AU - Crimp contact

1674781

https://www.phoenixcontact.com/us/products/1674781



Crimp contact, contact diameter: 2.5 mm, turned, Pin, contact material: Copper alloy, contact surface: gold-plated, connection cross section: 0.75 mm^2 ... 1 mm^2, AWG 18

HC-A16-I-CT-M - Contact insert

1585430

https://www.phoenixcontact.com/us/products/1585430

CK2,5-ED-1,50ST AU - Crimp contact

1674778

https://www.phoenixcontact.com/us/products/1674778



Crimp contact, contact diameter: 2.5 mm, turned, Pin, contact material: Copper alloy, contact surface: gold-plated, connection cross section: 1.5 mm^2 ... 1.5 mm^2, AWG 16

CK2,5-ED-2,50ST AU - Crimp contact

1674817

https://www.phoenixcontact.com/us/products/1674817



Crimp contact, contact diameter: 2.5 mm, turned, Pin, contact material: Copper alloy, contact surface: gold-plated, connection cross section: 2.5 mm^2 ... 2.5 mm^2, AWG 14

CK2,5-ED-4,00ST AU - Crimp contact

1674794

https://www.phoenixcontact.com/us/products/1674794



Crimp contact, contact diameter: 2.5 mm, turned, Pin, contact material: Copper alloy, contact surface: gold-plated, connection cross section: 4 mm^2 ... 4 mm^2, AWG 12

CK2,5-ED-0,37M AU - Crimp contact

1273603

https://www.phoenixcontact.com/us/products/1273603



Crimp contact, contact diameter: 2.5 mm, turned, Pin, contact material: Copper alloy, lead-free, contact surface: gold-plated, connection cross section: 0.14 mm^2 ... 0.37 mm^2, AWG 22 ... 26

CK2,5-ED-0,50M AU - Crimp contact

1273601

https://www.phoenixcontact.com/us/products/1273601



Crimp contact, contact diameter: 2.5 mm, turned, Pin, contact material: Copper alloy, lead-free, contact surface: gold-plated, connection cross section: 0.5 mm^2 ... 0.5 mm^2, AWG 20

CK2,5-ED-1,00M AU - Crimp contact

1273582

https://www.phoenixcontact.com/us/products/1273582



Crimp contact, contact diameter: 2.5 mm, turned, Pin, contact material: Copper alloy, lead-free, contact surface: gold-plated, connection cross section: 1 mm^2 ... 1 mm^2, AWG 18

CK2,5-ED-1,50M AU - Crimp contact

1273581

https://www.phoenixcontact.com/us/products/1273581



Crimp contact, contact diameter: 2.5 mm, turned, Pin, contact material: Copper alloy, lead-free, contact surface: gold-plated, connection cross section: 1.5 mm^2 ... 1.5 mm^2, AWG 16

CK2,5-ED-2,50M AU - Crimp contact

1273572

https://www.phoenixcontact.com/us/products/1273572



Crimp contact, contact diameter: 2.5 mm, turned, Pin, contact material: Copper alloy, lead-free, contact surface: gold-plated, connection cross section: 2.5 mm^2 ... 2.5 mm^2, AWG 14

HC-A16-I-CT-M - Contact insert

1585430

https://www.phoenixcontact.com/us/products/1585430

CK2,5-ED-4,00M AU - Crimp contact

1273568

https://www.phoenixcontact.com/us/products/1273568



Crimp contact, contact diameter: 2.5 mm, turned, Pin, contact material: Copper alloy, lead-free, contact surface: gold-plated, connection cross section: 4 mm^2 ... 4 mm^2, AWG 12

HC-A16-I-CT-F - Contact insert

1585443

https://www.phoenixcontact.com/us/products/1585443



Contact insert, number of positions: 16+PE, size: D25, number of connections per position: 1, Socket, Crimp connection, 250 V, 16 A, 0.5 mm^2 ... 4 mm^2

HC-A-PE-PT - Adapter

1054712

https://www.phoenixcontact.com/us/products/1054712



PE adapter with PT connection, for 1 PE connection, for HC-A10 / HC-A16 / HC-D15 / HC-D25 series contact inserts

UNIFOX MT-CK 1.6/2.5 - Assembly tool

1089092

https://www.phoenixcontact.com/us/products/1089092



Assembly tool, for CK 1.6... crimp contacts for small conductor cross sections

HC-A16-I-CT-M - Contact insert

1585430

https://www.phoenixcontact.com/us/products/1585430

UNIFOX RT-CK 2.5 - Contact removal tool

1072067

https://www.phoenixcontact.com/us/products/1072067



Contact removal tool, for turned CK 2,5... contacts

Phoenix Contact 2024 © - all rights reserved
https://www.phoenixcontact.com

Phoenix Contact USA
586 Fulling Mill Road
Middletown, PA 17057, United States
(+717) 944-1300
info@phoenixcon.com