SIEMENS

Data sheet 3RV2711-1AD10



Circuit breaker size S00 for system protection with approval circuit breaker UL 489, CSA C22.2 No.5-02 A-release 1.6 A N-release 21 A screw terminal Standard switching capacity

product brand name	SIRIUS
product designation	Circuit breaker
design of the product	For system protection according to UL 489/CSA C22.2 No. 5
product type designation	3RV2
General technical data	
size of the circuit-breaker	S00
product extension auxiliary switch	Yes
power loss [W] for rated value of the current	
● at AC in hot operating state	7.25 W
● at AC in hot operating state per pole	2.4 W
insulation voltage with degree of pollution 3 at AC rated value	690 V
surge voltage resistance rated value	6 kV
shock resistance according to IEC 60068-2-27	25 g / 11 ms (rectangular impulse and sine pulse)
mechanical service life (operating cycles)	
● of the main contacts typical	100 000
● of auxiliary contacts typical	100 000
electrical endurance (operating cycles) typical	100 000
reference code according to IEC 81346-2	Q
Substance Prohibitance (Date)	10/01/2009
Ambient conditions	
installation altitude at height above sea level maximum	2 000 m
ambient temperature	
● during operation	-20 ... +60 °C
● during storage	-50 ... +80 °C
● during transport	-50 ... +80 °C
relative humidity during operation	10 ... 95 %
Main circuit	
number of poles for main current circuit	3
operating voltage	
● rated value	20 ... 690 V
● at AC-3 rated value maximum	690 V
● at AC-3e rated value maximum	690 V
operating frequency rated value	50 ... 60 Hz
operational current rated value	1.6 A
operational current	
● at AC-3 at 400 V rated value	1.6 A
● at AC-3e at 400 V rated value	1.6 A
operating power	
● at AC-3	
— at 230 V rated value	0.3 kW

Subject to change without notice
© Copyright Siemens

— at 400 V rated value	0.6 kW
— at 500 V rated value	0.8 kW
— at 690 V rated value	1.1 kW
● at AC-3e	
— at 230 V rated value	0.3 kW
— at 400 V rated value	0.6 kW
— at 500 V rated value	0.8 kW
— at 690 V rated value	1.1 kW
operating frequency	
● at AC-3 maximum	15 1/h
● at AC-3e maximum	15 1/h
Protective and monitoring functions	
product function	
● ground fault detection	No
● phase failure detection	No
design of the overload release	thermal
maximum short-circuit current breaking capacity (Icu)	
● at AC at 240 V rated value	100 kA
● at AC at 400 V rated value	100 kA
● at AC at 500 V rated value	100 kA
● at AC at 690 V rated value	100 kA
● at 480 AC Y/277 V according to UL 489 rated value	65 kA
operating short-circuit current breaking capacity (Ics) at AC	
● at 240 V rated value	100 kA
● at 400 V rated value	100 kA
● at 500 V rated value	100 kA
● at 690 V rated value	100 kA
response value current of instantaneous short-circuit trip unit	21 A
Short-circuit protection	
product function short circuit protection	Yes
design of the short-circuit trip	magnetic
design of the fuse link for IT network for short-circuit protection of the main circuit	
● at 500 V	gG 20 A
● at 690 V	gG 16 A
Installation/ mounting/ dimensions	
mounting position	any
fastening method	screw and snap-on mounting onto 35 mm DIN rail according to DIN EN 60715
height	144 mm
width	45 mm
depth	97 mm
required spacing	
● for grounded parts at 400 V	
— downwards	30 mm
— upwards	30 mm
— at the side	30 mm
● for live parts at 400 V	
— downwards	30 mm
— upwards	30 mm
— at the side	30 mm
● for grounded parts at 500 V	
— downwards	30 mm
— upwards	30 mm
— at the side	30 mm
● for live parts at 500 V	
— downwards	30 mm
— upwards	30 mm
— at the side	30 mm
● for grounded parts at 690 V	
— downwards	70 mm
— upwards	70 mm

Subject to change without notice
© Copyright Siemens

— backwards	0 mm
— at the side	30 mm
— forwards	0 mm
• for live parts at 690 V	
— downwards	70 mm
— upwards	70 mm
— backwards	0 mm
— at the side	30 mm
— forwards	0 mm
Connections/ Terminals	
type of electrical connection	
• for main current circuit	screw-type terminals
arrangement of electrical connectors for main current circuit	Top and bottom
type of connectable conductor cross-sections	
• for main contacts	
— solid or stranded	1 ... 10 mm², max. 2x 10 mm²
— finely stranded with core end processing	1 ... 16 mm², max. 6 + 16 mm²
• for AWG cables for main contacts	2x (14 ... 10)
tightening torque	
• for main contacts with screw-type terminals	2.5 ... 3 N·m
design of screwdriver shaft	Diameter 5 to 6 mm
size of the screwdriver tip	Pozidriv size 2
design of the thread of the connection screw	
• for main contacts	M4
Safety related data	
B10 value	
• with high demand rate according to SN 31920	5 000
proportion of dangerous failures	
• with low demand rate according to SN 31920	50 %
• with high demand rate according to SN 31920	50 %
failure rate [FIT]	
• with low demand rate according to SN 31920	50 FIT
T1 value for proof test interval or service life according to IEC 61508	10 a
protection class IP on the front according to IEC 60529	IP20
touch protection on the front according to IEC 60529	finger-safe, for vertical contact from the front
display version for switching status	Handle

Certificates/ approvals

General Product Approval					Declaration of Conformity
Confirmation	CCC	UL	KC	EAC	CE EG-Konf.

Declaration of Conformity	Test Certificates		Marine / Shipping		other
UKCA	Type Test Certificates/Test Report	Special Test Certificate	BUREAU VERITAS	Lloyd's Register LRS	Confirmation

other	Railway
VDE	Vibration and Shock

Subject to change without notice
© Copyright Siemens

Further information

Siemens has decided to exit the Russian market (see here).
https://press.siemens.com/global/en/pressrelease/siemens-wind-down-russian-business

Siemens is working on the renewal of the current EAC certificates.
Please contact your local Siemens office on the status of validity of the EAC certification if you intend to import or offer to supply these products to an EAC relevant market (other than the sanctioned EAEU member states Russia or Belarus).

Information on the packaging
https://support.industry.siemens.com/cs/ww/en/view/109813875

Information- and Downloadcenter (Catalogs, Brochures,…)
https://www.siemens.com/ic10

Industry Mall (Online ordering system)
https://mall.industry.siemens.com/mall/en/en/Catalog/product?mlfb=3RV2711-1AD10

Cax online generator
http://support.automation.siemens.com/WW/CAXorder/default.aspx?lang=en&mlfb=3RV2711-1AD10

Service&Support (Manuals, Certificates, Characteristics, FAQs,...)
https://support.industry.siemens.com/cs/ww/en/ps/3RV2711-1AD10

Image database (product images, 2D dimension drawings, 3D models, device circuit diagrams, EPLAN macros, ...)
http://www.automation.siemens.com/bilddb/cax_de.aspx?mlfb=3RV2711-1AD10&lang=en

Characteristic: Tripping characteristics, I²t, Let-through current
https://support.industry.siemens.com/cs/ww/en/ps/3RV2711-1AD10/char

Further characteristics (e.g. electrical endurance, switching frequency)
http://www.automation.siemens.com/bilddb/index.aspx?view=Search&mlfb=3RV2711-1AD10&objecttype=14&gridview=view1

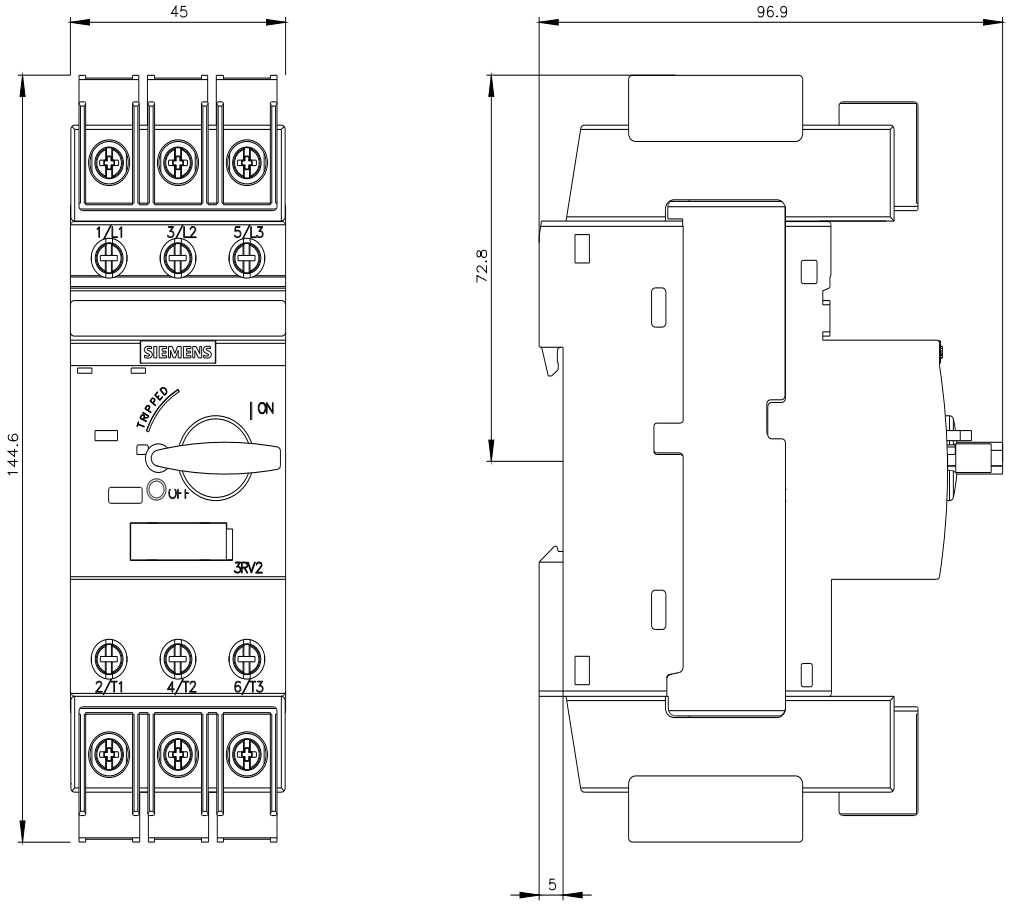

Subject to change without notice
© Copyright Siemens

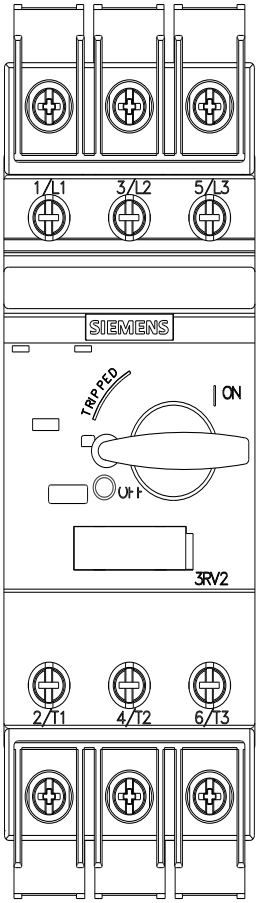

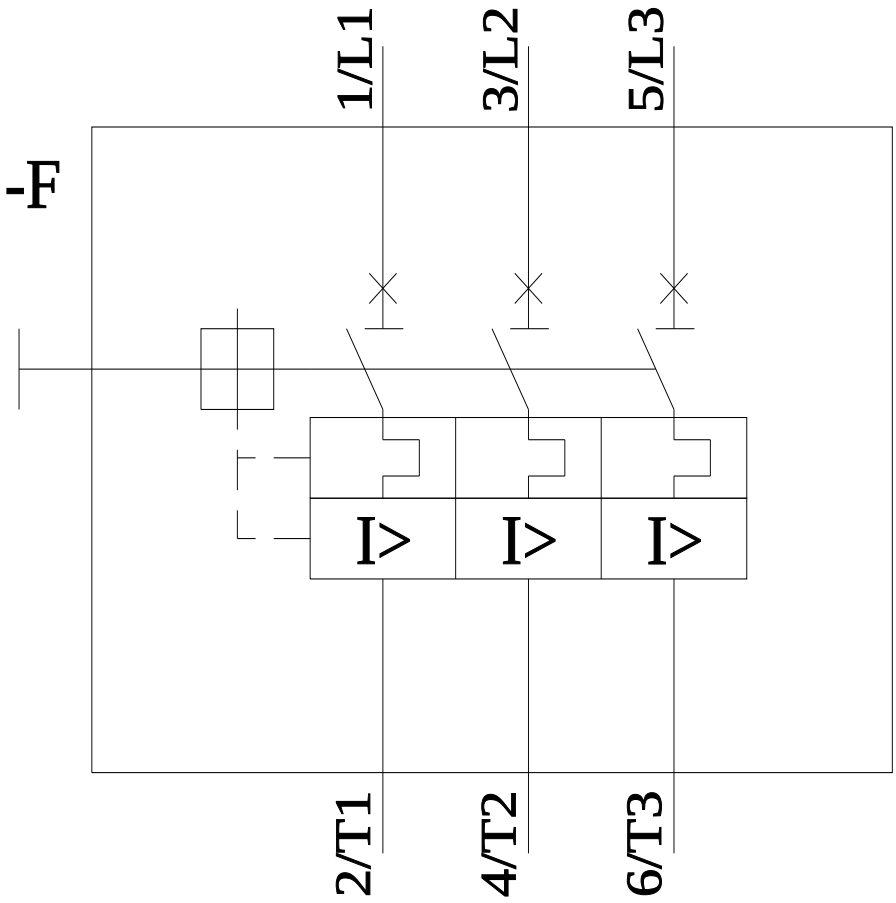

last modified: 5/1/2023

Subject to change without notice
© Copyright Siemens