Small-sized, plastic type, push-pull lock connectors

RP17 Series

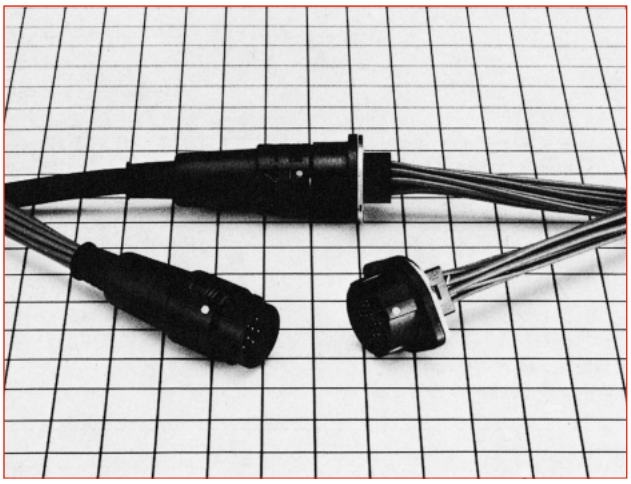

■Features

1. Superior mating operability

- Secure mating and easy unmating is achieved by a push-pull locking mechanism.
- White index markings are provided on the mating positions of the plug for easy mating alignment.
- Our proprietary guide key allows for blind mating conditions to be accomplished easily.

2. Light weight and robust design

The strong outer shell is made of glass-reinforced polycarbonate resin, and produces a light but highly durable connectors.

3. Anti-static electricity type

The metal plates in the receptacle protect the signal lines from static electricity.

■Product Specifications

Ratings	Rated current	Contact numbers 1, 3 to 10 : 2 A (when using a wire of at least 26 AWG) Contact numbers 2, 11, 12 : 5 A (when using a wire of at least 22 AWG)	Operating temperature range	–10 to +60℃
	Rated voltage	AC100V, DC140V	Storage temperature range	–10 to +60℃

Items	Specifications	Conditions
1. Contact resistance	15mΩ max. DIP Type : 20mΩ max.	Measured at DC 1A
2. Insulation resistance	1,000MΩ min.	Measured at DC 500V
3. Withstanding voltage	No flashover or dielectric breakdown.	AC 1000V for 1 minute
4. Vibration resistance	No electrical discontinuity for 10μs or greater.	10 to 55Hz/cycle, amplitude : 0.75mm, 3 axis directions, 2 hours each direction
5. Shock resistance	No electrical discontinuity for 10μs or greater.	Acceleration : 490m/s^2, duration : 11ms, 3 axis directions, 3 times each direction
6. Mating cycles	Contact resistance : 20mΩ max. Dip type : 25mΩ max.	1,000 times
7. Temperature cycle	Insulation resistance : 1,000MΩ min.	–55℃ : 30 minutes → Normal temperature : 10 to 15 minutes → 85℃ : 30 minutes → Normal Temperature : 10 to 15 minutes, left for 5 cycles
8. Moisture resistance	Insulation resistance : 10MΩ min. (at high humidities) 100MΩ min. (when dry)	Temperature : 40℃ , relative humidity : 90 to 95%, left for 96 hours

■Materials / Finish

Items		Material	Finish	Remarks
Plug	Shell, insulator	Polycarbonate resin	———	UL94V-0
	Clamp	Brass	———	———
	Bushing	Vinyl chloride resin	———	———
Receptacle	Shell, insulator	Poly carbonate resin	———	UL94V-0
		Steel	Nickel plating	———
	Female contact	Phosphor bronze	Silver plating	———
Crimped female contact	Female contact	Phosphor bronze	Silver plating	———
Crimped male contact	Male contact	Phosphor bronze	Silver plating	———

May.1.2024 Copyright 2024 HIROSE ELECTRIC CO., LTD. All Rights Reserved.

■Product Number Structure

Refer to the chart below when determining the product specifications from the product number.
Please select from the product numbers listed in this catalog when placing orders.

● Plug

RP17 A - 13 P A - 12 S C (01)
❶ ❷ ❸ ❹ ❺ ❻ ❼ ❽ ❾

❶ Model name : RP17 Series	❻ Number of contacts
❷ Type identification No marking : Standard type A : Anti-static electricity type	❼ Contact form S : Female contact P : Male contact
❸ Shell size : The shell size is measured at the outer diameter of the mating interface of the plug.	❽ Contact termination method: C : Contact termination by crimping D : Straight PCB dipping method
❹ Shell type P : Straight plug R : Receptacle J : Jack	❾ Other specifications : A two-digit character is added to indicate other specifications when needed.
❺ Shell variation : Connectors are distinguished by A, B, or C if another variation is applied in the same form.	

● Crimp contact

RP17 - SC - 2 1 2
❶ ❾ ❿ ⓫ ⓬

❶ Model name : RP17	⓫ Applicable wire gauge 1 : For 18 to 22 AWG 2 : For 24 to 30 AWG
❾ Contact type : SC : Crimped female contact PC : Crimped male contact	⓬ Type of plating 2 : Silver plating
❿ Contact form 1 : Loose piece contacts 2 : Reel contacts	

May.1.2024 Copyright 2024 HIROSE ELECTRIC CO., LTD. All Rights Reserved.

■Plug (standard type)



RP17-13P-12PC(71)

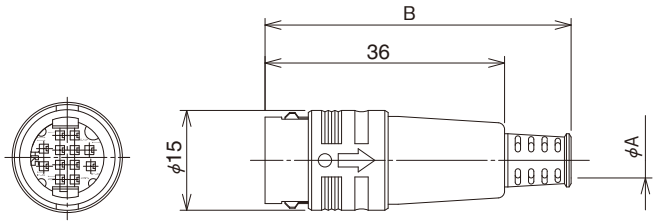

(Representative example.)

Part No.	HRS No.	ϕA	B
RP17-13P-12PC(71)	113-0501-0 71	5.3	46
RP17-13PA-12PC(71)	113-0512-7 71	6.1	51

Note : Cable clamping force, cable rotation force, and other aspects may differ depending on the cable construction. We recommend that you verify the suitability of the cable assembly before use or production.

■Plug (anti-static electricity type)



RP17A-13P-12PC(71)

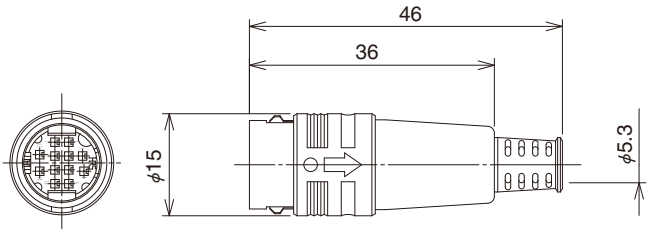

Part No.	HRS No.
RP17A-13P-12PC(71)	113-0551-9 71

Note : Cable clamping force, cable rotation force, and others aspects may differ depending on the cable construction. We recommend that you verify the suitability of the cable assembly before use or production.

■Receptacle (standard type)

(Crimping type)



RP17-13R-12SC(71)

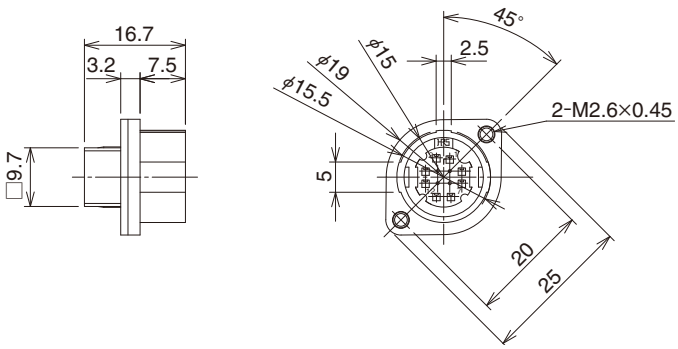

Part No.	HRS No.
RP17-13R-12SC(71)	113-0502-3 71

May.1.2024 Copyright 2024 HIROSE ELECTRIC CO., LTD. All Rights Reserved.

■Receptacle (standard type)

(PCB dip type)



RP17-13RA-12SD(71)

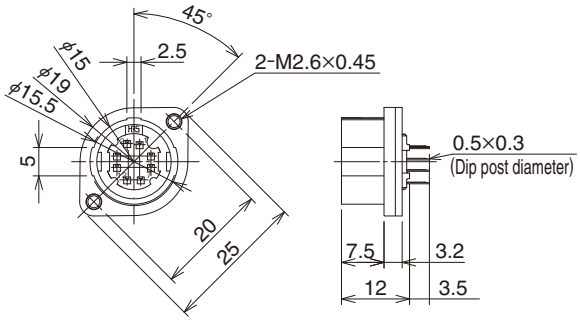

Part No.	HRS No.
RP17-13RA-12SD(71)	113-0511-4 71

Remarks : See page 5 for details on dip post assignment and layout.

■Receptacle (anti-static electricity type)

(PCB dip type)



RP17A-13RA-12SD(71)

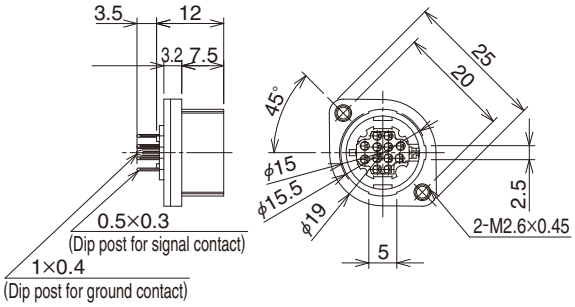

Part No.	HRS No.
RP17A-13RA-12SD(71)	113-0553-4 71

Remarks : See page 5 for details on dip post assignment and layout.

■Jack (standard type)



RP17-13J-12SC(71)

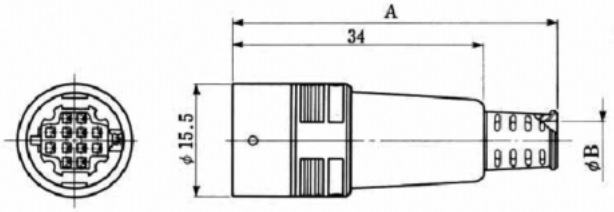

(Representative example.)

Part No.	HRS No.	A	φB
RP17-13J-12SC(71)	113-0515-5 71	44	5.3
RP17-13JA-12SC(71)	113-0516-8 71	49	6.1

Note : Cable clamping force, cable rotation force, and others aspects may differ depending on the cable construction. We recommend that you verify the suitability of the cable assembly before use or production.

May.1.2024 Copyright 2024 HIROSE ELECTRIC CO., LTD. All Rights Reserved.

Dip post assignment and layout for receptacles

(Figures show as when viewed from the receptacle mating side.)

● **(Standard type)**

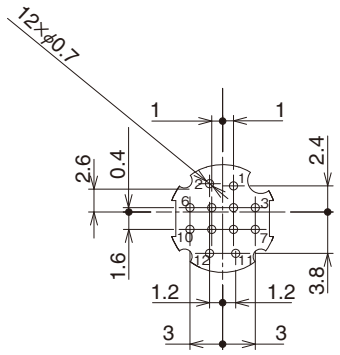

● **(Anti-static electricity type)**

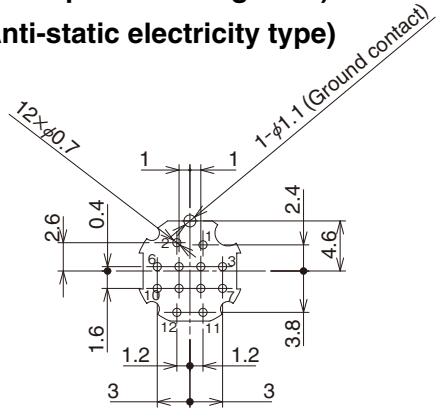

Remarks : The machining tolerance of ±0.05 is recommended for the PCB layout dimensions.

■Contact

Male contact

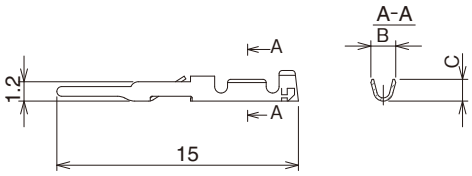

Type	Part No.	HRS No.	B	C	Applicable wire size
Loose piece contacts	RP17-PC-112	113-0503-6	1.6	2.1	18 to 22 AWG
	RP17-PC-122	113-0504-9	1.2	1.35	24 to 30 AWG
Reel contacts	RP17-PC-212	113-0507-7	1.6	2.1	18 to 22 AWG
	RP17-PC-222	113-0508-0	1.2	1.35	24 to 30 AWG

Female contact

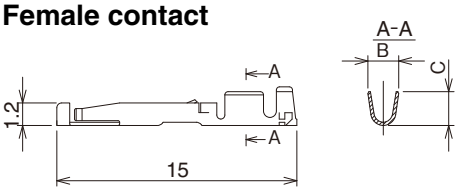

Type	Part No.	HRS No.	B	C	Applicable wire size
Loose piece contacts	RP17-SC-112	113-0505-1	1.6	2.1	18 to 22 AWG
	RP17-SC-122	113-0506-4	1.2	1.35	24 to 30 AWG
Reel contacts	RP17-SC-212	113-0509-2	1.6	2.1	18 to 22 AWG
	RP17-SC-222	113-0510-1	1.2	1.35	24 to 30 AWG

Applicable tools

Type	Items	Part No.	HRS No.	Applicable contact	Applicable wire size
Manual	Manual crimping tools	RP17-TC-11	150-0043-8	RP17-$^{PC}_{SC}$-112	18 to 22 AWG
		RP17-TC-12	150-0044-0	RP17-$^{PC}_{SC}$-122	24 to 30 AWG
Auto	Automatic crimping press	CM-105C	901-0001-0	————	————
	Applicator	AP105-RP17-1	901-2036-9	RP17-$^{PC}_{SC}$-212	18 to 22 AWG
		AP105-RP17-2	901-2026-5	RP17-$^{PC}_{SC}$-222	24 to 30 AWG
Cable crimping tool		RP17-TC-01	150-0042-5	————	————
Extraction tool		RP6-SC-TP	150-0039-0	————	————



Extraction tool



Cable crimping tool
(The handle shape shown is a representative example.)



Manual crimping tools



Automatic crimping press
(Type CM-105C)

May.1.2024 Copyright 2024 HIROSE ELECTRIC CO., LTD. All Rights Reserved.

Termination procedure

● Plug

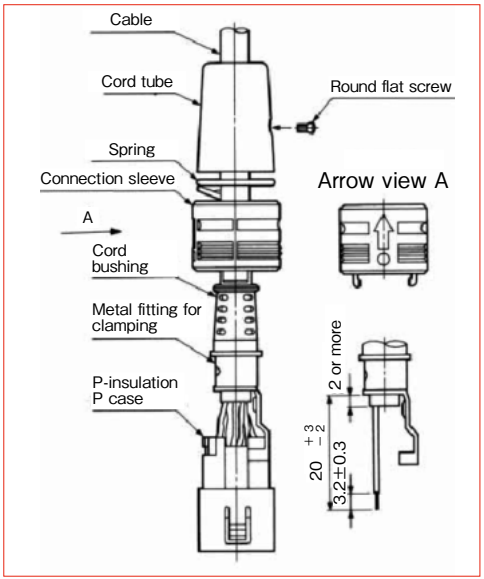

Operation procedure

1. First, pass the terminated cable in the following order through the: cord tube, spring, connection sleeve, and cord bushing. Then crimp and terminate the contacts.
2. Assemble the crimped and terminated contacts to the contact holes of the P-insulation P case. At this time, please make sure that the crimped contacts are securely engaged onto the contact holes of the P-insulation P case by slightly pulling on the cable.
3. Attach the metal fitting by clamping to it the cord bushing and assemble these into the P-insulation P case. Then crimp the metal fitting by clamping it with the applicable tool (RP17-TC-01).
4. Next, attach in the following order to the P-insulation P case: connection sleeve, spring, and cord. Then align the screw hole of the cord tube and that of the metal fitting for clamping, and tighten the round flat screw to the specified torque of 0.15 to 0.2N·m.
   In addition, in order to prevent loosening of the screw, please apply Locktight 243 manufactured by Henkel Japan Ltd., Tokyo or equivalent.
5. After the assembly procedure described above has been completed, please make sure that the connection sleeve moves correctly.

Contact arrangement

Contact arrangement	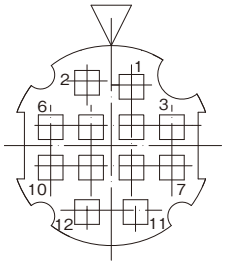

Remarks : 1. The figure shows the receptacle when viewed from the mating end (plug connection end).

Precautions

This product series uses silver plated contacts. Silver reacts easily to exposure to sulfur gas so the below conditions may cause tarnishing.

- Dusty environments
- Area with a high concentration area of gases such as sulfur dioxide gas, hydrogen sulfide gas, nitrogen dioxide gas and so on.
  Example; In close proximity to factory exhaust, automotive emissions, etc.
- Close to heaters, or in other areas marked by extreme temperature differences or high humidity.
- Close to rubber products includes rubber adhesives.

The Electrical connection is not affected by tarnishing on a silver surface due to the wiping effect of the contact pins.

Storage
Packing state; Packed in original packing or equivalent container
Temperature -10 to +60℃
Humidity 85% Max
(It is recommended that the product be stored in an area of normal level of temperature and humidity, and free of any temperature fluctuation)

Please use this products within 6 months of delivery.
(After 6 month, please check the solderbility before use)
“Storage” means long-term storage of the unused products in sealed packaging, prior to assembly to PCB.

Please note that the white label on the connector may come off due to solvents such as alcohol.

HIROSE ELECTRIC CO.,LTD.
2-6-3,Nakagawa Chuoh,Tsuzuki-Ku,Yokohama-Shi 224-8540,JAPAN
https://www.hirose.com/

May.1.2024 Copyright 2024 HIROSE ELECTRIC CO., LTD. All Rights Reserved.

The characteristics and the specifications contained herein are for reference purpose. Please refer to the latest customer drawings prior to use.
The contents of this catalog are current as of date of 03/2022. Contents are subject to change without notice for the purpose of improvements.