0.5mm Pitch SMT Board-to-Board Connectors

DF12N Series

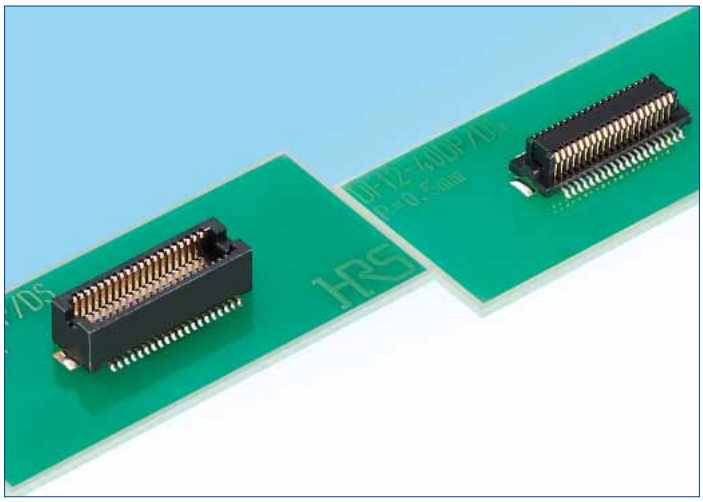

Pick & Place Mounting

Vacuum Pick-up Area Available for Pick & Place Mounting Machines.

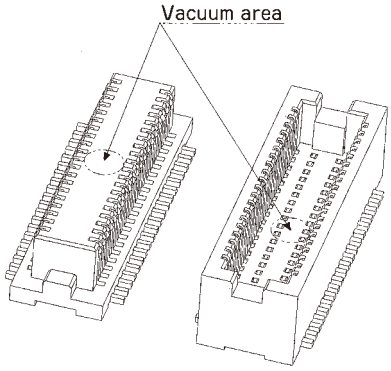

Fig.1

■Features

1. Wide Variety of Stacking Heights

Stacking heights of 3mm, 3.5mm 4mm and 5mm are provided in addition to the ultra-compact size of 0.5mm pitch.

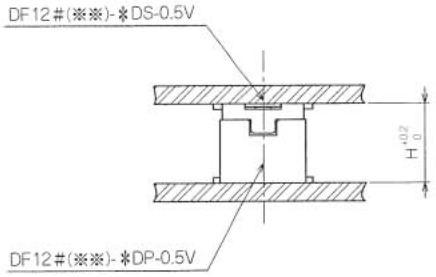

Header/Receptacle	DF12#(3.0)-*DS-0.5V Combination Stacking Height	DF12#-*DS-0.5V Combination Stacking Height
DF12#(3.0)-*DP-0.5V	3.0	————
DF12#(3.5)-*DP-0.5V	————	3.5
DF12#(4.0)-*DP-0.5V	————	4.0
DF12#(5.0)-*DP-0.5V	————	5.0

Note 1 : The (**) after DF12# indicates the stacking height.
Note 2 : The stacking height does not include the soldering paste thickness.

[Stacking Height Variations]

Stacking Height		3.0mm	3.5mm	4.0mm	5.0mm
No. of Pos.	10pos.	✔	————	————	————
	14pos.	✔	————	————	————
	20pos.	✔	✔	✔	✔
	30pos.	✔	✔	✔	✔
	32pos.	✔	————	✔	————
	36pos.	✔	✔	✔	✔
	40pos.	✔	✔	✔	✔
	50pos.	✔	✔	✔	✔
	60pos.	✔	✔	✔	✔
	80pos.	✔	————	————	————

2. Pick & Place Mounting

The connector has the vacuum pick-up area to enable automatic mounting with the embossed tape packaging. (Fig.1)

3. Solder Tabs on the Soldering Portion

In consideration of mounting on FPC, solder tabs are provided on the product in order to prevent solder peeling.

4. 5Gbps Transmission Speed

Aug.1.2025 Copyright 2025 HIROSE ELECTRIC CO., LTD. All Rights Reserved.

■Product Specifications

Ratings	Rated Current 0.3A Rated Voltage 50V AC	Operating Temperature -55 to +125℃ (Note 1) Operating Humidity Range 40 to 80%	Storage Temperature Range -10 to +60℃ (Note 2) Storage Humidity Range 40 to 70% (Note 2)

Items	Specifications	Conditions	
1. Insulation Resistance	500MΩ min.	100V DC	
2. Withstanding Voltage	No flashover or insulation breakdown.	150V AC per min.	
3. Contact Resistance	50mΩ max.	20mV AC or less 1kHz, 1mA.	
4. Vibration	No electrical discontinuity of 1μs or more	Frequency : 10 to 55 Hz, single amplitude of 0.75mm, 2 hours in each of the 3 directions.	
5. Humidity (Steady State)	Contact resistance : 50mΩ max. Insulation resistance : 500MΩ min	96 hours at temperature of 40±2℃ and humidity of 90% to 95%	
6. Temperature Cycle	Contact resistance : 50mΩ max. Insulation resistance : 500MΩ min	(-65℃ : 30 minutes 5 to 35℃ : 3 minutes 125℃ : 30 minutes 5 to 35℃ : 3 minutes) 5 cycles	
7. Mating Durability	Contact resistance : 50mΩ max.	50 cycles	
8. Resistance to Soldering Heat	No deformation of components affecting performance.	SMT Type	Reflow : At the recommended temperature profile
			Manual soldering : 350℃ for 3 seconds

Note 1 : Includes temperature rise due to current flow. (105℃ in automotive vibration environment)
Note 2 : The term "storage" refers to products stored for long period of time prior to mounting and use. Operating Temperature Range and Humidity range covers non conducting condition of installed connectors in storage, shipment or during transportation.

■Materials / Finish

Product	Part	Material	Finish	Remarks
Receptacle/Header	Insulator	Polyamide	Black	UL94V-0
	Contact	Phosphor Copper	Gold Plated	—
	Solder Tab	Brass	Tin Plated	—

■Product Number Structure

Refer to the chart below when determining the product specifications from the product number.
Please select from the product numbers listed in this catalog when placing orders.

●Receptacle

DF12 # (※※) - ＊ DS - 0.5 V (＊＊)
❶ ❷ ❸ ❹ ❺ ❻ ❼ ❽

❶ Series Name : DF12

❷ Type

	Solder Tab
NB	✔
NC	×

❸ Stacking Height
3.0 : 3.0mm
Blank : 3.5 to 5.0mm

❹ No. of Pos. : 10, 14, 20, 30, 32, 36, 40, 50, 60, 80

❺ Connector Type
DS : Double-row Receptacle

❻ Contact Pitch : 0.5mm

❼ Contact Style
V : Straight SMT

❽ Packaging Type
(51) : Embossed Tape Packaging (1,000pcs/reel)

●Header

DF12 # (※※) - ＊ DP - 0.5 V (＊＊)
❶ ❷ ❸ ❹ ❺ ❻ ❼ ❽

❶ Series Name : DF12

❷ Type

	Solder Tab
NB	✔
NC	×

❸ Stacking Height

Indication	Stacking Height
3.0	3.0mm
3.5	3.5mm
4.0	4.0mm
5.0	5.0mm

❹ No. of Pos. : 10, 14, 20, 30, 32, 36, 40, 50, 60, 80

❺ Connector Type
DP : Double-row Pin Header

❻ Contact Pitch : 0.5mm

❼ Contact Style
V : Straight SMT

❽ Packaging Type
(51) : Embossed Tape Packaging (1,000pcs/reel)

Aug.1.2025 Copyright 2025 HIROSE ELECTRIC CO., LTD. All Rights Reserved.

■Receptacle Without Solder Tab

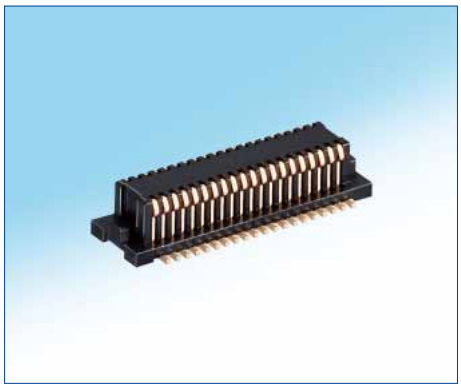

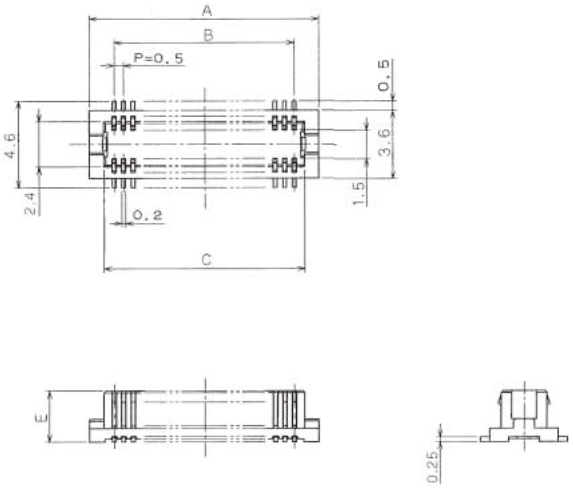

●Stacking Height : 3mm Product

Unit : mm

Part No.	HRS No.	No. of Pos.	A	B	C	E	Remarks	RoHS
DF12NC(3.0)-10DS-0.5V(51)	537-0191-0 51	10	4.6	2.0	3.1	2.2	Without Solder Tab	YES
DF12NC(3.0)-14DS-0.5V(51)	537-0192-0 51	14	5.6	3.0	4.1			
DF12NC(3.0)-20DS-0.5V(51)	537-0193-0 51	20	7.1	4.5	5.6			
DF12NC(3.0)-30DS-0.5V(51)	537-0194-0 51	30	9.6	7.0	8.1			
DF12NC(3.0)-32DS-0.5V(51)	537-0195-0 51	32	10.1	7.5	8.6			
DF12NC(3.0)-36DS-0.5V(51)	537-0196-0 51	36	11.1	8.5	9.6			
DF12NC(3.0)-40DS-0.5V(51)	537-0197-0 51	40	12.1	9.5	10.6			
DF12NC(3.0)-50DS-0.5V(51)	537-0198-0 51	50	14.6	12.0	13.1			
DF12NC(3.0)-60DS-0.5V(51)	537-0199-0 51	60	17.1	14.5	15.6			
DF12NC(3.0)-80DS-0.5V(51)	537-0285-0 51	80	22.1	19.5	20.6			

●Stacking Height : 3.5 to 5mm Product

Unit : mm

Part No.	HRS No.	No. of Pos.	A	B	C	E	Remarks	RoHS
DF12NC-20DS-0.5V(51)	537-0292-0 51	20	7.1	4.5	5.6	2.7	Without Solder Tab	YES
DF12NC-30DS-0.5V(51)	537-0293-0 51	30	9.6	7.0	8.1			
DF12NC-32DS-0.5V(51)	537-0294-0 51	32	10.1	7.5	8.6			
DF12NC-36DS-0.5V(51)	537-0295-0 51	36	11.1	8.5	9.6			
DF12NC-40DS-0.5V(51)	537-0296-0 51	40	12.1	9.5	10.6			
DF12NC-50DS-0.5V(51)	537-0297-0 51	50	14.6	12.0	13.1			
DF12NC-60DS-0.5V(51)	537-0298-0 51	60	17.1	14.5	15.6			

Note : Please order the embossed tape packaging product per reel. (1,000pcs/reel)

Aug.1.2025 Copyright 2025 HIROSE ELECTRIC CO., LTD. All Rights Reserved.

■Receptacle With Solder Tab

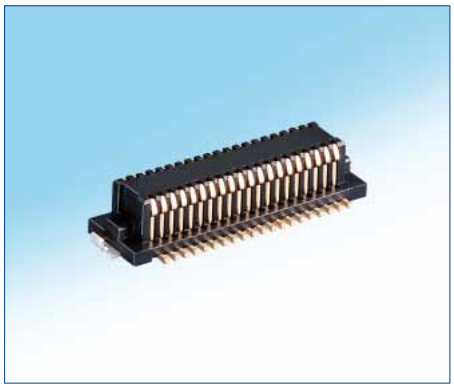

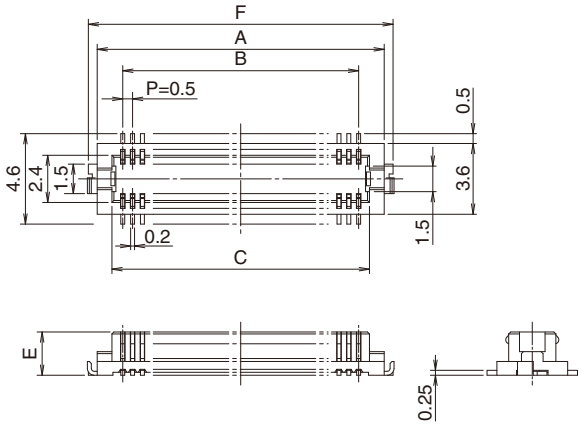

●Stacking Height : 3mm Product

Unit : mm

Part No.	HRS No.	No. of Pos.	A	B	C	E	F	Remarks	RoHS
DF12NB(3.0)-10DS-0.5V(51)	537-0097-0 51	10	4.6	2.0	3.1	2.2	5.6	With Solder Tab	YES
DF12NB(3.0)-14DS-0.5V(51)	537-0098-0 51	14	5.6	3.0	4.1		6.6		
DF12NB(3.0)-20DS-0.5V(51)	537-0099-0 51	20	7.1	4.5	5.6		8.1		
DF12NB(3.0)-30DS-0.5V(51)	537-0185-0 51	30	9.6	7.0	8.1		10.6		
DF12NB(3.0)-32DS-0.5V(51)	537-0186-0 51	32	10.1	7.5	8.6		11.1		
DF12NB(3.0)-36DS-0.5V(51)	537-0187-0 51	36	11.1	8.5	9.6		12.1		
DF12NB(3.0)-40DS-0.5V(51)	537-0188-0 51	40	12.1	9.5	10.6		13.1		
DF12NB(3.0)-50DS-0.5V(51)	537-0189-0 51	50	14.6	12.0	13.1		15.6		
DF12NB(3.0)-60DS-0.5V(51)	537-0190-0 51	60	17.1	14.5	15.6		18.1		
DF12NB(3.0)-80DS-0.5V(51)	537-0095-0 51	80	22.1	19.5	20.6		23.1		

●Stacking Height : 3.5 to 5mm Product

Unit : mm

Part No.	HRS No.	No. of Pos.	A	B	C	E	F	Remarks	RoHS
DF12NB-20DS-0.5V(51)	537-0286-0 51	20	7.1	4.5	5.6	2.7	8.1	With Solder Tab	YES
DF12NB-30DS-0.5V(51)	537-0287-0 51	30	9.6	7.0	8.1		10.6		
DF12NB-32DS-0.5V(51)	537-0288-0 51	32	10.1	7.5	8.6		11.1		
DF12NB-36DS-0.5V(51)	537-0289-0 51	36	11.1	8.5	9.6		12.1		
DF12NB-40DS-0.5V(51)	537-0290-0 51	40	12.1	9.5	10.6		13.1		
DF12NB-50DS-0.5V(51)	537-0291-0 51	50	14.6	12.0	13.1		15.6		
DF12NB-60DS-0.5V(51)	537-0096-0 51	60	17.1	14.5	15.6		18.1		

Note : Please order the embossed tape packaging product per reel. (1,000pcs/reel)

Aug.1.2025 Copyright 2025 HIROSE ELECTRIC CO., LTD. All Rights Reserved.

■Header Without Solder Tab

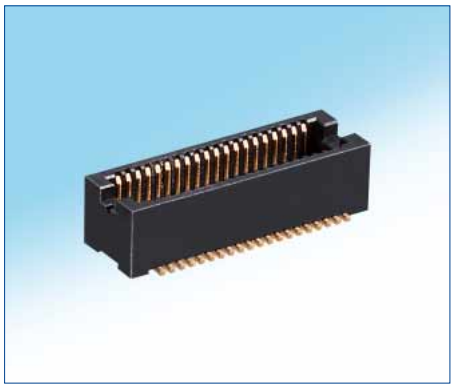

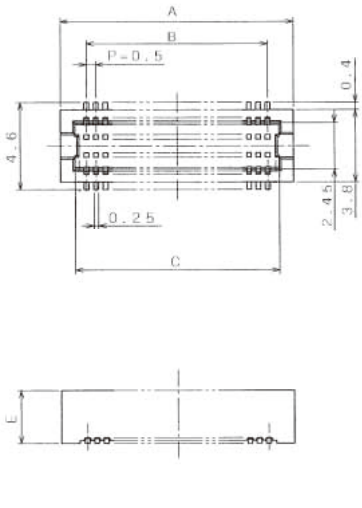

●Stacking Height : 3mm Product

Unit : mm

Part No.	HRS No.	No. of Pos.	A	B	C	E	Remarks	RoHS
DF12NC(3.0)-10DP-0.5V(51)	537-0396-0 51	10	4.7	2.0	3.2	2.3	Without Solder Tab	YES
DF12NC(3.0)-14DP-0.5V(51)	537-0397-0 51	14	5.7	3.0	4.2			
DF12NC(3.0)-20DP-0.5V(51)	537-0398-0 51	20	7.2	4.5	5.7			
DF12NC(3.0)-30DP-0.5V(51)	537-0399-0 51	30	9.7	7.0	8.2			
DF12NC(3.0)-32DP-0.5V(51)	537-0487-0 51	32	10.2	7.5	8.7			
DF12NC(3.0)-36DP-0.5V(51)	537-0488-0 51	36	11.2	8.5	9.7			
DF12NC(3.0)-40DP-0.5V(51)	537-0489-0 51	40	12.2	9.5	10.7			
DF12NC(3.0)-50DP-0.5V(51)	537-0490-0 51	50	14.7	12.0	13.2			
DF12NC(3.0)-60DP-0.5V(51)	537-0491-0 51	60	17.2	14.5	15.7			
DF12NC(3.0)-80DP-0.5V(51)	537-0492-0 51	80	22.2	19.5	20.7			

Note : Please order the embossed tape packaging product per reel. (1,000pcs/reel)

Aug.1.2025 Copyright 2025 HIROSE ELECTRIC CO., LTD. All Rights Reserved.

■Header Without Solder Tab

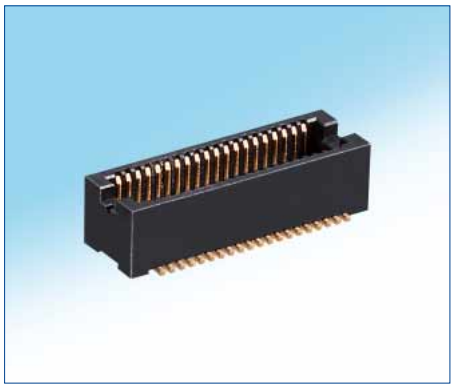

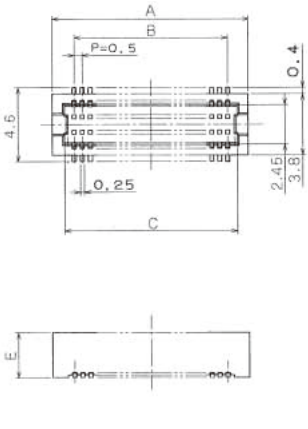

●Stacking Height : 3.5 to 5mm Product

Unit : mm

Part No.	HRS No.	No. of Pos.	A	B	C	E	Remarks	RoHS
DF12NC(3.5)-20DP-0.5V(51)	537-0499-0 51	20	7.2	4.5	5.7	2.8	Without Solder Tab	YES
DF12NC(3.5)-30DP-0.5V(51)	537-0587-0 51	30	9.7	7.0	8.2			
DF12NC(3.5)-36DP-0.5V(51)	537-0588-0 51	36	11.2	8.5	9.7			
DF12NC(3.5)-40DP-0.5V(51)	537-0589-0 51	40	12.2	9.5	10.7			
DF12NC(3.5)-50DP-0.5V(51)	537-0590-0 51	50	14.7	12.0	13.2			
DF12NC(3.5)-60DP-0.5V(51)	537-0591-0 51	60	17.2	14.5	15.7			
DF12NC(4.0)-20DP-0.5V(51)	537-0599-0 51	20	7.2	4.5	5.7	3.3		
DF12NC(4.0)-30DP-0.5V(51)	537-0699-0 51	30	9.7	7.0	8.2			
DF12NC(4.0)-32DP-0.5V(51)	537-0872-0 51	32	10.2	7.5	8.7			
DF12NC(4.0)-36DP-0.5V(51)	537-0873-0 51	36	11.2	8.5	9.7			
DF12NC(4.0)-40DP-0.5V(51)	537-0874-0 51	40	12.2	9.5	10.7			
DF12NC(4.0)-50DP-0.5V(51)	537-0875-0 51	50	14.7	12.0	13.2			
DF12NC(4.0)-60DP-0.5V(51)	537-0876-0 51	60	17.2	14.5	15.7			
DF12NC(5.0)-20DP-0.5V(51)	537-0883-0 51	20	7.2	4.5	5.7	4.3		
DF12NC(5.0)-30DP-0.5V(51)	537-0884-0 51	30	9.7	7.0	8.2			
DF12NC(5.0)-36DP-0.5V(51)	537-0885-0 51	36	11.2	8.5	9.7			
DF12NC(5.0)-40DP-0.5V(51)	537-0886-0 51	40	12.2	9.5	10.7			
DF12NC(5.0)-50DP-0.5V(51)	537-0887-0 51	50	14.7	12.0	13.2			
DF12NC(5.0)-60DP-0.5V(51)	537-0888-0 51	60	17.2	14.5	15.7			

Note : Please order the embossed tape packaging product per reel. (1,000pcs/reel)

Aug.1.2025 Copyright 2025 HIROSE ELECTRIC CO., LTD. All Rights Reserved.

■Header With Solder Tab

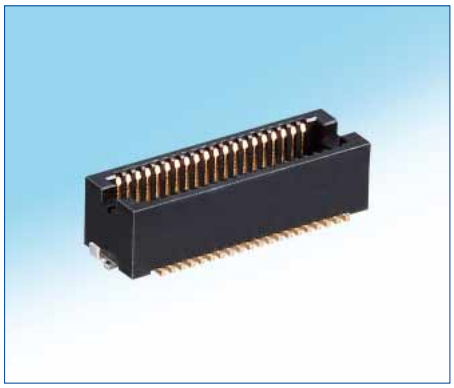

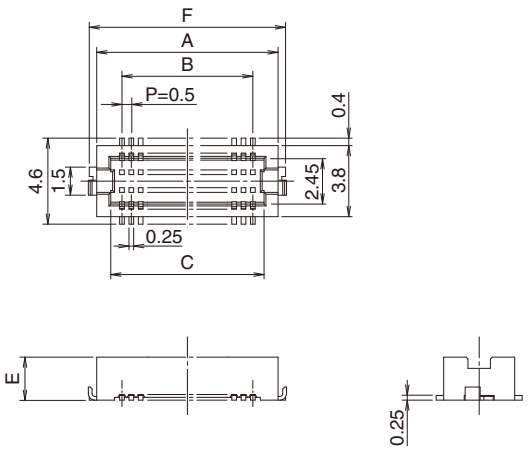

●Stacking Height : 3mm Product

Unit : mm

Part No.	HRS No.	No. of Pos.	A	B	C	E	F	Remarks	RoHS
DF12NB(3.0)-10DP-0.5V(51)	537-0299-0 51	10	4.7	2.0	3.2	2.3	5.6	With Solder Tab	YES
DF12NB(3.0)-14DP-0.5V(51)	537-0387-0 51	14	5.7	3.0	4.2		6.6		
DF12NB(3.0)-20DP-0.5V(51)	537-0388-0 51	20	7.2	4.5	5.7		8.1		
DF12NB(3.0)-30DP-0.5V(51)	537-0389-0 51	30	9.7	7.0	8.2		10.6		
DF12NB(3.0)-32DP-0.5V(51)	537-0390-0 51	32	10.2	7.5	8.7		11.1		
DF12NB(3.0)-36DP-0.5V(51)	537-0391-0 51	36	11.2	8.5	9.7		12.1		
DF12NB(3.0)-40DP-0.5V(51)	537-0392-0 51	40	12.2	9.5	10.7		13.1		
DF12NB(3.0)-50DP-0.5V(51)	537-0393-0 51	50	14.7	12.0	13.2		15.6		
DF12NB(3.0)-60DP-0.5V(51)	537-0394-0 51	60	17.2	14.5	15.7		18.1		
DF12NB(3.0)-80DP-0.5V(51)	537-0395-0 51	80	22.2	19.5	20.7		23.1		

Note : Please order the embossed tape packaging product per reel. (1,000pcs/reel)

Aug.1.2025 Copyright 2025 HIROSE ELECTRIC CO., LTD. All Rights Reserved.

■Header With Solder Tab

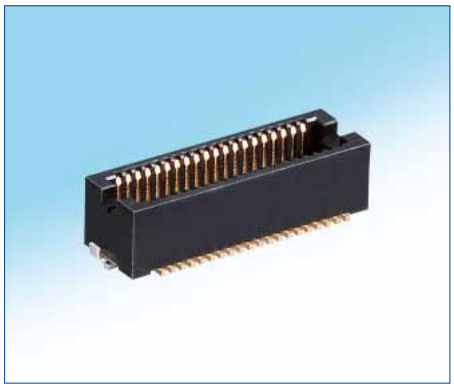

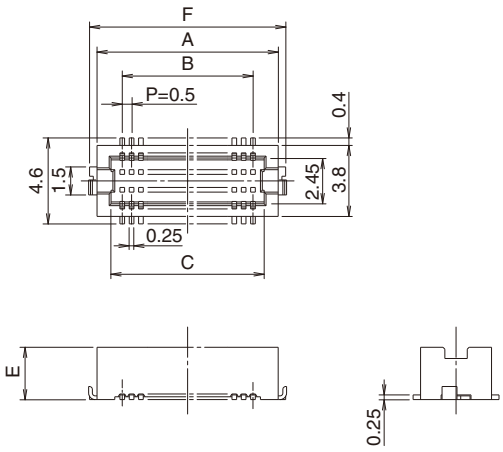

●Stacking Height : 3.5 to 5mm Product

Unit : mm

Part No.	HRS No.	No. of Pos.	A	B	C	E	F	Remarks	RoHS
DF12NB(3.5)-20DP-0.5V(51)	537-0493-0 51	20	7.2	4.5	5.7	2.8	8.1	With Solder Tab	YES
DF12NB(3.5)-30DP-0.5V(51)	537-0494-0 51	30	9.7	7.0	8.2		10.6		
DF12NB(3.5)-36DP-0.5V(51)	537-0495-0 51	36	11.2	8.5	9.7		12.1		
DF12NB(3.5)-40DP-0.5V(51)	537-0496-0 51	40	12.2	9.5	10.7		13.1		
DF12NB(3.5)-50DP-0.5V(51)	537-0497-0 51	50	14.7	12.0	13.2		15.6		
DF12NB(3.5)-60DP-0.5V(51)	537-0498-0 51	60	17.2	14.5	15.7		18.1		
DF12NB(4.0)-20DP-0.5V(51)	537-0592-0 51	20	7.2	4.5	5.7	3.3	8.1		
DF12NB(4.0)-30DP-0.5V(51)	537-0593-0 51	30	9.7	7.0	8.2		10.6		
DF12NB(4.0)-32DP-0.5V(51)	537-0594-0 51	32	10.2	7.5	8.7		11.1		
DF12NB(4.0)-36DP-0.5V(51)	537-0595-0 51	36	11.2	8.5	9.7		12.1		
DF12NB(4.0)-40DP-0.5V(51)	537-0596-0 51	40	12.2	9.5	10.7		13.1		
DF12NB(4.0)-50DP-0.5V(51)	537-0597-0 51	50	14.7	12.0	13.2		15.6		
DF12NB(4.0)-60DP-0.5V(51)	537-0598-0 51	60	17.2	14.5	15.7		18.1		
DF12NB(5.0)-20DP-0.5V(51)	537-0877-0 51	20	7.2	4.5	5.7	4.3	8.1		
DF12NB(5.0)-30DP-0.5V(51)	537-0878-0 51	30	9.7	7.0	8.2		10.6		
DF12NB(5.0)-36DP-0.5V(51)	537-0879-0 51	36	11.2	8.5	9.7		12.1		
DF12NB(5.0)-40DP-0.5V(51)	537-0880-0 51	40	12.2	9.5	10.7		13.1		
DF12NB(5.0)-50DP-0.5V(51)	537-0881-0 51	50	14.7	12.0	13.2		15.6		
DF12NB(5.0)-60DP-0.5V(51)	537-0882-0 51	60	17.2	14.5	15.7		18.1		

Note : Please order the embossed tape packaging product per reel. (1,000pcs/reel)

Aug.1.2025 Copyright 2025 HIROSE ELECTRIC CO., LTD. All Rights Reserved.

◆Embossed Carrier Tape Dimensions

●Receptacle

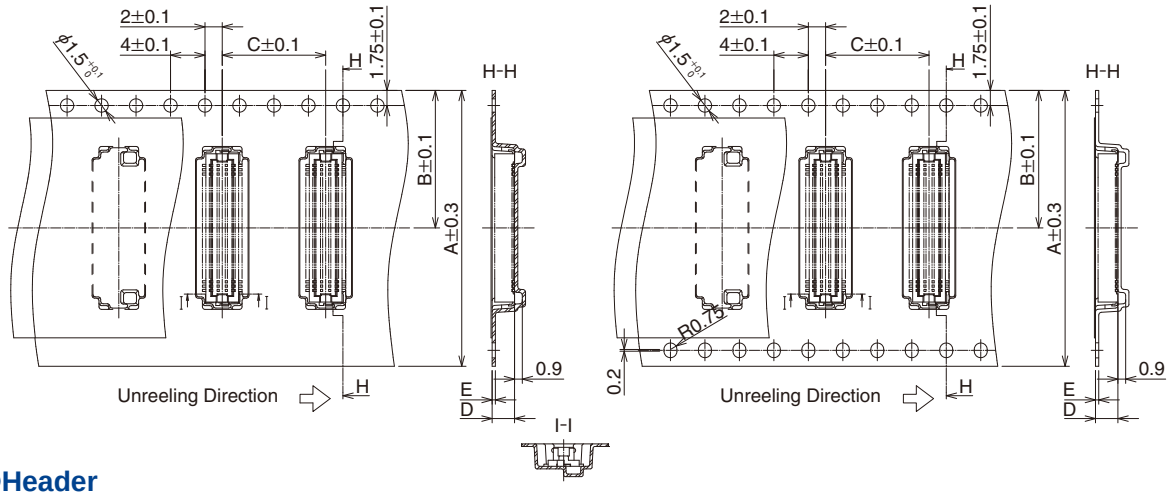

●Header

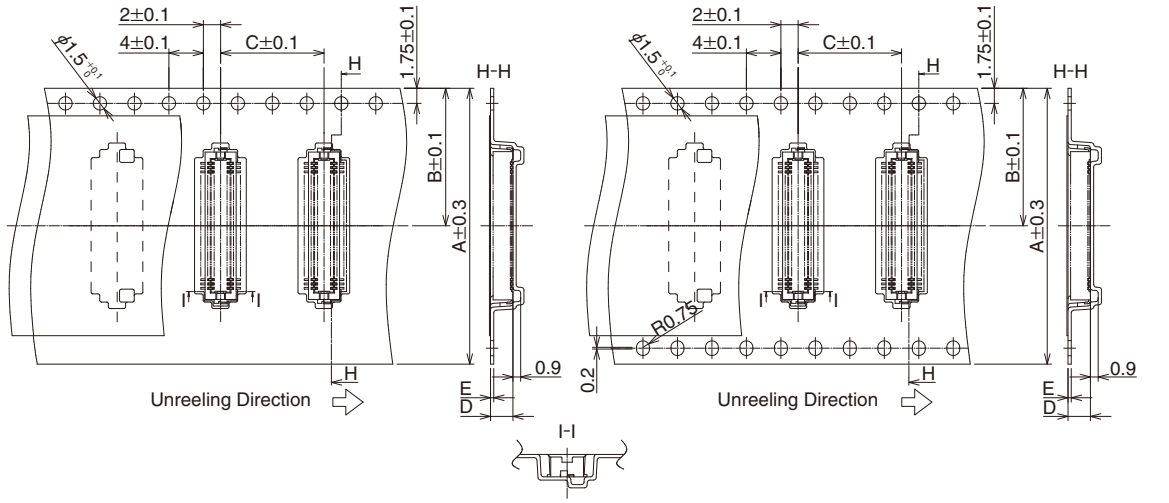

Connector	A	B	C	D	E	F	G
DF12#(3.0)-10DS-0.5V	16	7.5	12	2.6	0.30	17.5	21.5
DF12#(3.0)-14DS-0.5V					0.38		
DF12#(3.0)-20DS-0.5V							
DF12#(3.0)-30DS-0.5V	24	11.5				25.5	29.5
DF12#(3.0)-32DS-0.5V							
DF12#(3.0)-36DS-0.5V							
DF12#(3.0)-40DS-0.5V							
DF12#(3.0)-50DS-0.5V							
DF12#(3.0)-60DS-0.5V	32	14.2				33.5	37.5
DF12#(3.0)-80DS-0.5V	44	20.2				45.5	49.5
DF12#(3.0)-10DP-0.5V	16	7.5			0.30	17.5	21.5
DF12#(3.0)-14DP-0.5V					0.38		
DF12#(3.0)-20DP-0.5V							
DF12#(3.0)-30DP-0.5V	24	11.5				25.5	29.5
DF12#(3.0)-32DP-0.5V							
DF12#(3.0)-36DP-0.5V							
DF12#(3.0)-40DP-0.5V							
DF12#(3.0)-50DP-0.5V							
DF12#(3.0)-60DP-0.5V	32	14.2				33.5	37.5
DF12#(3.0)-80DP-0.5V	44	20.2				45.5	49.5
DF12#-20DS-0.5V	16	7.5		3.1		17.5	21.5
DF12#-30DS-0.5V	24	11.5				25.5	29.5
DF12#-32DS-0.5V					0.30		
DF12#-36DS-0.5V			8				
DF12#-40DS-0.5V			12		0.38		
DF12#-50DS-0.5V			8		0.30		
DF12#-60DS-0.5V	32	14.2	12		0.38	33.5	37.5

Connector	A	B	C	D	E	F	G
DF12#(3.5)-20DP-0.5V	16	7.5	12	3.1	0.38	17.5	21.5
DF12#(3.5)-30DP-0.5V	24	11.5				25.5	29.5
DF12#(3.5)-36DP-0.5V			8		0.30		
DF12#(3.5)-40DP-0.5V			12		0.38		
DF12#(3.5)-50DP-0.5V			8		0.30		
DF12#(3.5)-60DP-0.5V	32	14.2	12		0.38	33.5	37.5
DF12#(4.0)-20DP-0.5V	16	7.5		3.6		17.5	21.5
DF12#(4.0)-30DP-0.5V	24	11.5				25.5	29.5
DF12#(4.0)-32DP-0.5V					0.30		
DF12#(4.0)-36DP-0.5V			8				
DF12#(4.0)-40DP-0.5V			12		0.38		
DF12#(4.0)-50DP-0.5V			8		0.30		
DF12#(4.0)-60DP-0.5V	32	14.2	12		0.38	33.5	37.5
DF12#(5.0)-20DP-0.5V	16	7.5		4.6		17.5	21.5
DF12#(5.0)-30DP-0.5V	24	11.5				25.5	29.5
DF12#(5.0)-36DP-0.5V					0.38		
DF12#(5.0)-40DP-0.5V							
DF12#(5.0)-50DP-0.5V			8		0.30		
DF12#(5.0)-60DP-0.5V	32	14.2	12		0.38	33.5	37.5

Aug.1.2025 Copyright 2025 HIROSE ELECTRIC CO., LTD. All Rights Reserved.

●Reel Dimensions

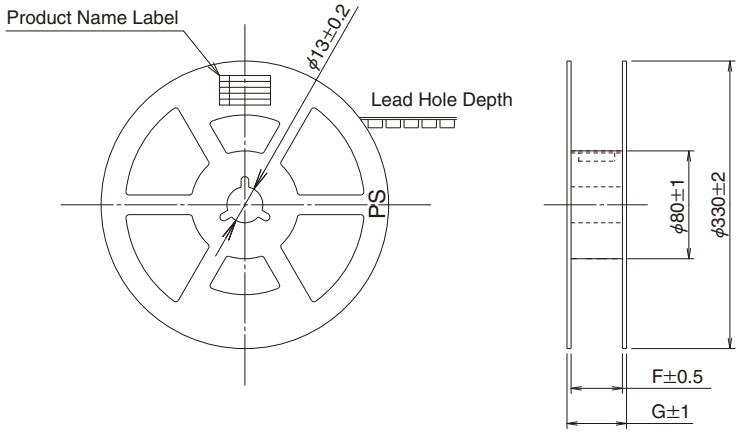

◆Recommended PCB mounting pattern

■DF12N with Solder Tab

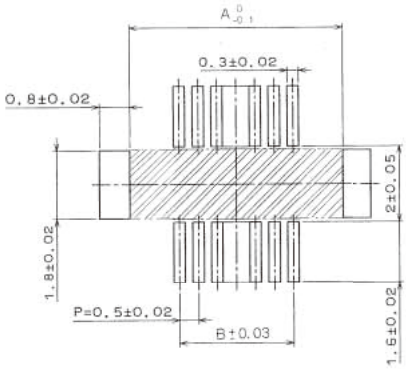

■DF12N without Solder Tab

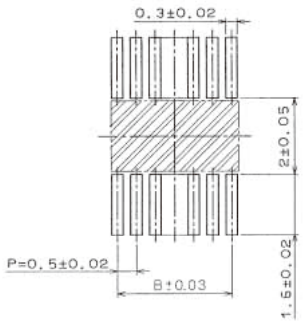

Note 1 : Refer to 3 to 8 for dimensions A and B.

Note 2 : ▨ If there is a pattern on the shaded area and no resist is applied, it may come into contact with the connector contact.

Aug.1.2025 Copyright 2025 HIROSE ELECTRIC CO., LTD. All Rights Reserved.

◆Precautions for Use

1.Recommended Temperature Profile (SMT)	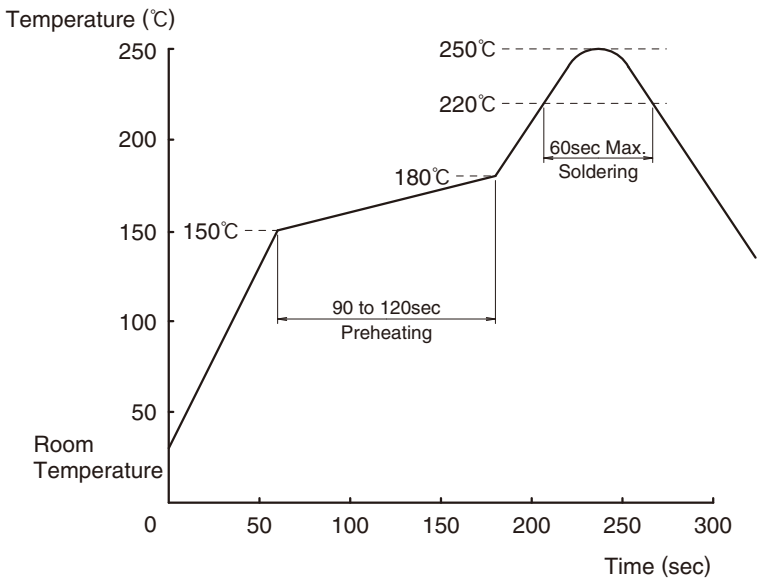 Note 1 : Up to 2 cycles of Reflow soldering are possible under the same conditions, provided that there is a return to normal temperature between the first and second cycle. Note 2 : The temperature profile indicates the temperature of the surface of the connector lead.
2.Recommended Manual Soldering Condition (SMT)	Soldering iron temperature : 350℃, Soldering time : Within 3 seconds
3.Recommended Screen Thickness and Open Area Ratio(Pattern Area Ratio)	0.12mm Open area ratio : 70%
4.Board Warp(SMT)	Maxmum 0.02mm in the connector center area, based on both connector edges
5.Cleaning Condition	Refer to "Nylon Connector Use Handbook".
6.Cautions	■ The receptacle is designed with the contacts exposed. Touching the contacts with bare hands may cause contact failure or damage to the device due to static electricity. ■ Insertion/extraction when not mounted to the board may result in damage or contact deformation. ■ Avoid securing the board only with the connector. Please use other methods to secure the board. ■ Excessive prying during insertion and extraction may result in damage. ■ Do not apply flux that will result in flux rise during manual soldering. ■ The color of the mold may differ slightly depending on the production lot however this does not affect the performance.

Aug.1.2025 Copyright 2025 HIROSE ELECTRIC CO., LTD. All Rights Reserved.

HIROSE ELECTRIC CO.,LTD.
2-6-3,Nakagawa Chuoh,Tsuzuki-Ku,Yokohama-Shi 224-8540,JAPAN
https://www.hirose.com/