TOLERANCE UNLESS OTHERWISE SPECIFIED	
0-10	±0.20
10-30	±0.30
30-100	±0.40

THIS IS A C.A.D. GENERATED DRAWING
DO NOT MAKE MANUAL REVISIONS TO MASTER.

ISSUE NUMBER	
ORIGINAL	1

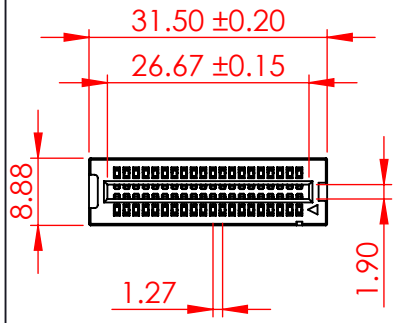

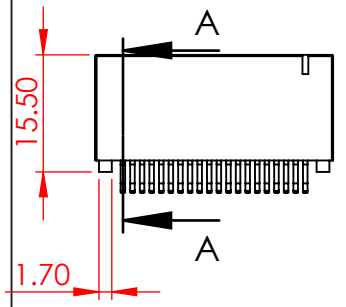

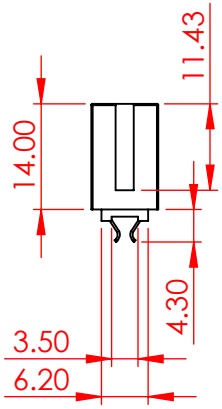

SPECIFICATIONS:

MATERIAL:

HOUSING:	HI-TEMP THERMOPLASTIC, PPS
CONTACT:	COPPER ALLOY
PLATING:	15µ" GOLD PLATING ON CONTACT AREA, TIN PLATING ON SOLDERING AREA

ELECTRICAL

VOLTAGE RATING:	250 VAC RMS
CURRENT RATING:	1A
DIELECTRIC WITHSTANDING VOLTAGE:	500VAC RMS 60Hz FOR 60s
INSULATION RESISTANCE:	1000 MEGA OHMS MIN AT 500VDC
CONTACT RESISTANCE:	30 mOHMS MAX

MECHANICAL

RETENTION FORCE:	460g MIN PER CONTACT
INSERTION FORCE:	230g MAX PER CONTACT PAIR
WITHDRAWAL FORCE:	15g MIN PER CONTACT PAIR

ENVIRONMENTAL

TEMPERATURE RANGE:	-55°C TO +105°C

NOTE:
4 TO 124 POSITIONS ARE AVAILABLE EXCEPT 18, 28, 34, 38, 42 TO 46, 54 TO 58 POSITIONS

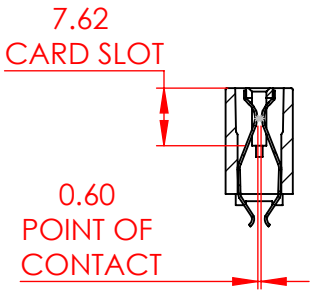

SECTION A-A
SCALE 1 : 1

RoHS COMPLIANT

THIS SERIES FULLY CONFORMS TO THE EUROPEAN UNION DIRECTIVES 2011/65/EU FOR RoHS COMPLIANCY.

802 SERIES CARD EDGE CONNECTOR

ACAD REFERENCE NO.: 802 Assembly		UNIT: MM
DRAWN: J.L.	DATE: June 6, 2023	
CHECKED:	DATE:	
SCALE: 1:1	SHEET 1 OF 1	
DRAWING NUMBER: 802-040-356-201		ISSUE 1
PART NUMBER: 802-040-356-201		

EDAC INC
TORONTO, ONTARIO
CANADA
YOUR CONNECTION TO QUALITY & SERVICE

THESE DRAWINGS AND SPECIFICATIONS ARE THE PROPERTY OF EDAC INC.,AND SHALL NOT BE REPRODUCED,OR COPIED OR USED AS THE BASIS FOR THE MANUFACTURE OR SALE OF APPARATUS WITHOUT WRITTEN PERMISSION.