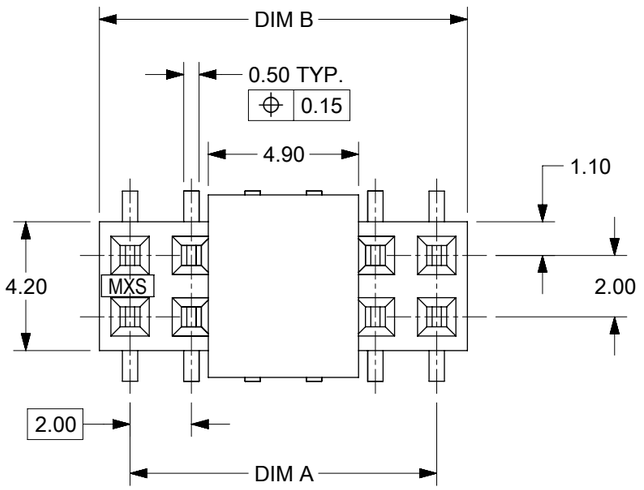

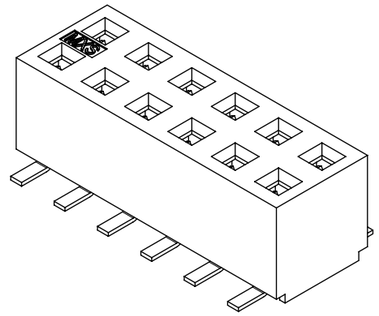

ISOMETRIC VIEW WITHOUT CAP

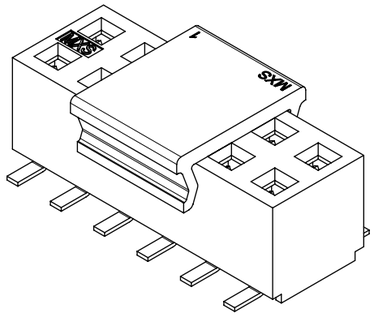

ISOMETRIC VIEW WITH CAP

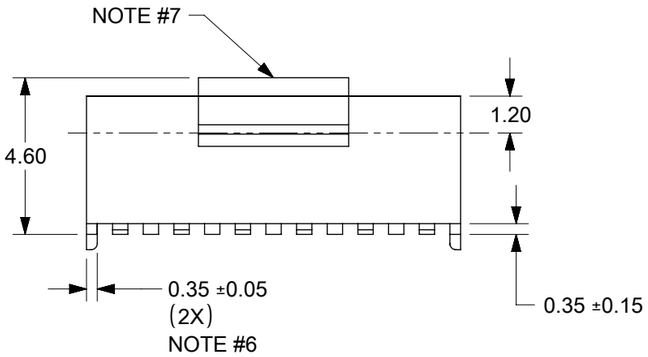

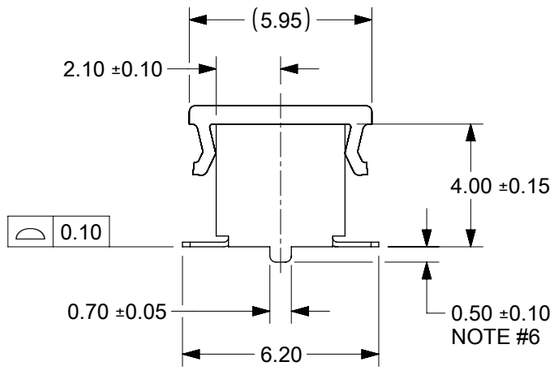

NOTES:

1. PLATING FINISH :
   - 1 - 0.76µm MIN. GOLD IN CONTACT AREA
     1.27µm MIN TIN IN SOLDER TAIL AREA
     BOTH OVER 1.27µm MIN NICKEL OVERALL
   - 2 - 0.38µm MIN GOLD IN CONTACT AREA
     1.27µm MIN TIN IN SOLDER TAIL AREA
     BOTH OVER 1.27µm MIN NI OVERALL
   - 3 - 0.05µm MIN. GOLD IN CONTACT AREA
     1.90µm MIN TIN IN SOLDER TAIL AREA
     BOTH OVER 1.27µm MIN NICKEL OVERALL
2. MATERIAL:
   - HOUSING : NYLON 4/6, 94V-0, COLOUR BLACK
   - CAP : NYLON, GLASS FILLED, COLOUR BLACK
   - TERMINAL : COPPER ALLOY
   - EMBOSS TAPE : CLEAR POLYSTYRENE
   - COVER TAPE : CLEAR POLYESTER
3. PRODUCT SPECIFICATION PS-87380 APPLIES
4. COPLANARITY OF SOLDER TAILS ARE TO BE MEASURED BY RESTING THE PART ON A FLAT GAUGE SURFACE
5. OTHER PLATING OPTIONS AVAILABLE. PLEASE CONTACT FACTORY
6. PEG, PCB HOLE AND CAP ARE OPTIONAL. SEE PART TABLE FOR PART CONFIGURATON
7. POSITION OF CAP TO BE LOCATED AT CENTER OF DIM A REGARDLESS OF CKT SIZES.
8. 12 CKT SIZE SHOWN FOR ILLUSTRATION ONLY. SEE CHART FOR ALL AVAILABLE PART SIZES. 22 CKT ILLUSTRATED FOR TAPE/REEL VERSION ON SHT 2.
9. FOR PACKING QTY PER REEL REFER TO TABLE A IN SHT 2.
10. PARTS SHALL BE PACKED IN MOISTURE BARRIER BAG.

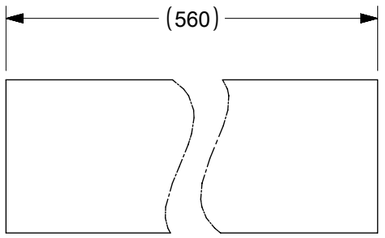

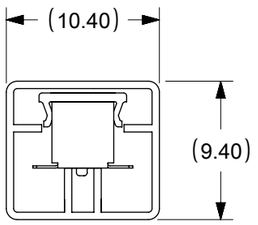

PART WITH CAP IN TUBE

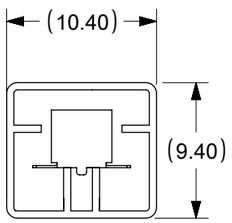

PART W/O CAP IN TUBE

CONNECTOR ORIENTATION IN TUBE

SYMBOLS			
FA = 0			
FC = 0			
FB = 0			
S = 0			
▼ = 0			
C = 0			
☒ = 0			
■ = 0			
▽ = 0			

THIS DRAWING CONTAINS INFORMATION THAT IS PROPRIETARY TO MOLEX ELECTRONIC TECHNOLOGIES, LLC AND SHOULD NOT BE USED WITHOUT WRITTEN PERMISSION

DIMENSION UNITS	SCALE
mm	NTS

GENERAL TOLERANCES (UNLESS SPECIFIED)

ANGULAR TOL	±	3.0 °
4 PLACES	±	
3 PLACES	±	
2 PLACES	±	0.2
1 PLACE	±	
0 PLACES	±	

DRAFT WHERE APPLICABLE MUST REMAIN WITHIN DIMENSIONS

CURRENT REV DESC:

EC NO:	736158	
DRWN:	DANUSA	2023/01/23
CHK'D:	DANUSA	2023/01/25
APPR:	MRAMAKRISHNA	2023/02/03

INITIAL REVISION:

DRWN:	SCS02	2018/08/07
APPR:	MRAMAKRISHNA	2019/07/09

THIRD ANGLE PROJECTION

DRAWING	SERIES
A3-SIZE	87381

molex

MGRID TOP ENTRY RECEPTACLE
4MM HEIGHT, SMT.

PRODUCT CUSTOMER DRAWING

DOCUMENT NUMBER	DOC TYPE	DOC PART	REVISION
873810001-SD	PSD	000	A2

MATERIAL NUMBER	CUSTOMER	SHEET NUMBER
	GENERAL MARKET	1 OF 7

DOCUMENT STATUS	P1	RELEASE DATE	2023/02/03	08:12:09

FORMAT: master-tb-prod-A3
REVISION: H
DATE: 2018/01/18

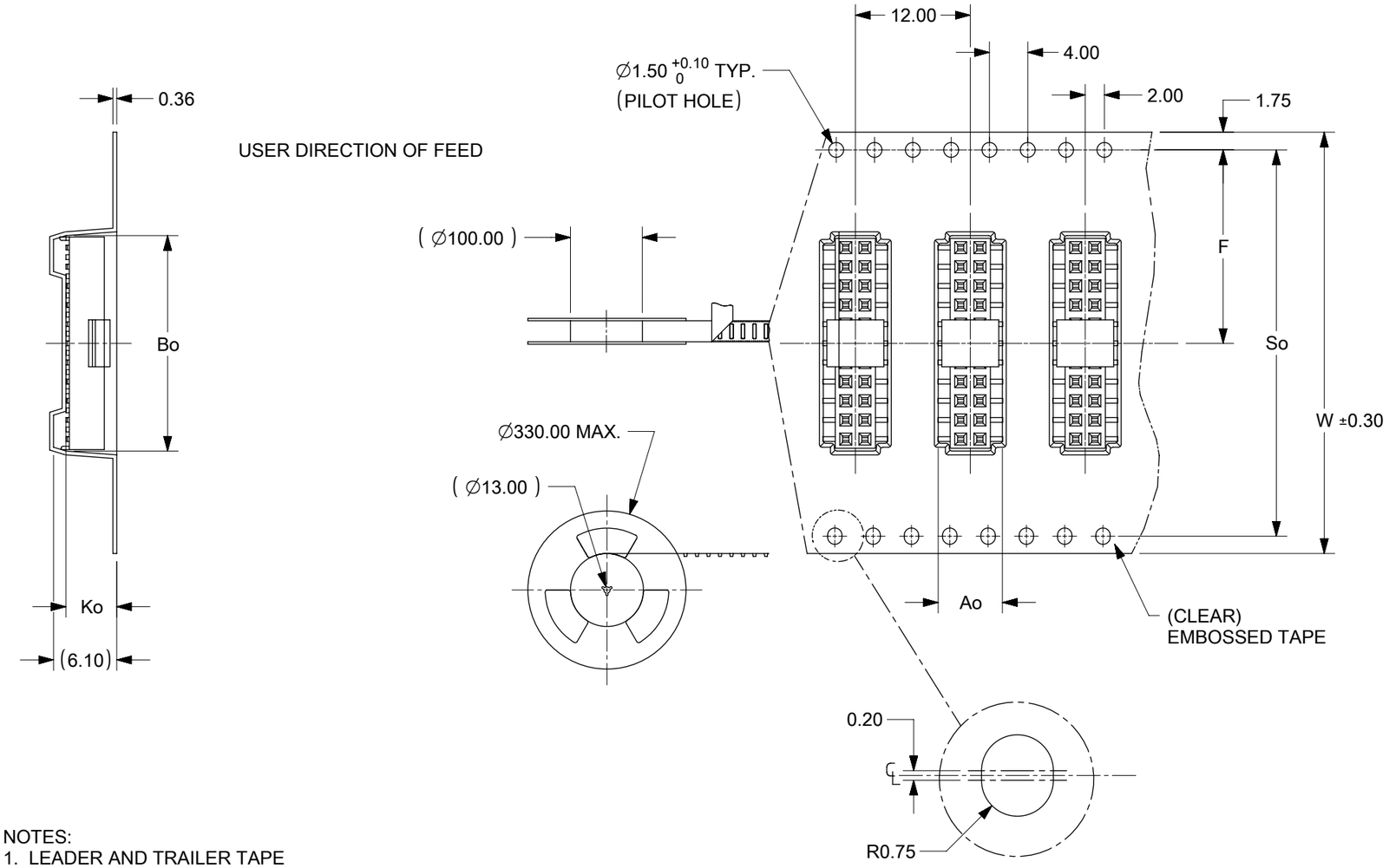

TAPE & REEL ORIENTATION (22 CKT SHOWN FOR REF)
NTS

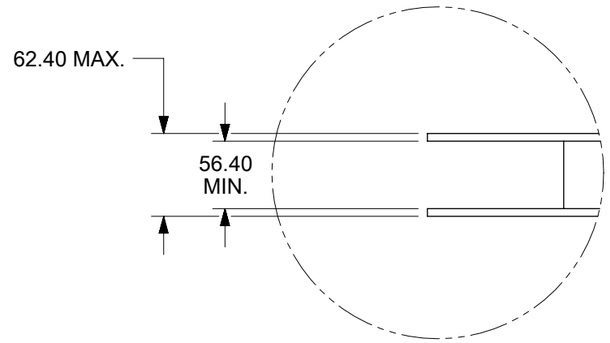

DETAIL A

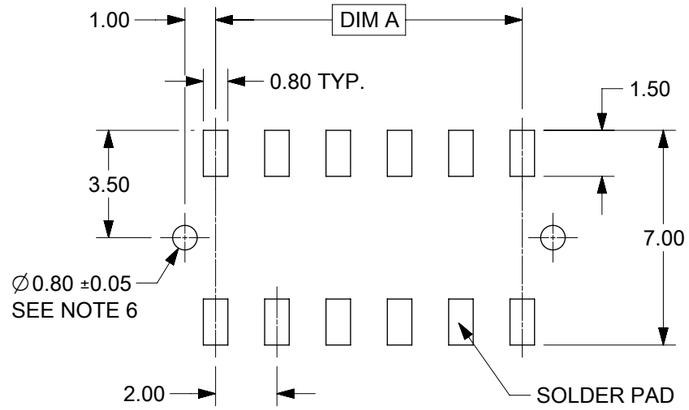

RECOMENDED PCB LAYOUT

NOTES:
1. LEADER AND TRAILER TAPE

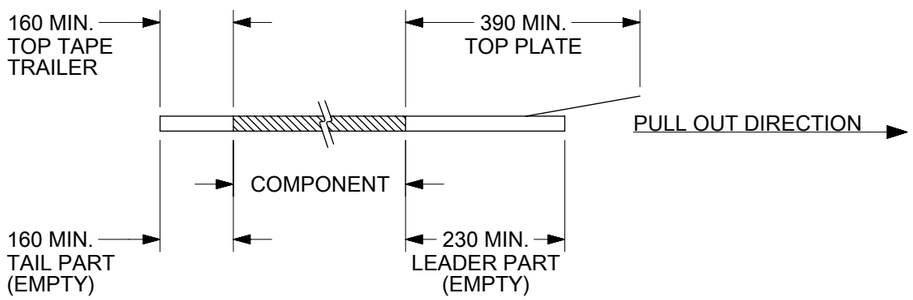

2. PEELING OFF FORCE OF THE TOP TAPE: 20-80gf.
(PEELING DIRECTION AS SHOWN IN FOLLOWING FIGURE)

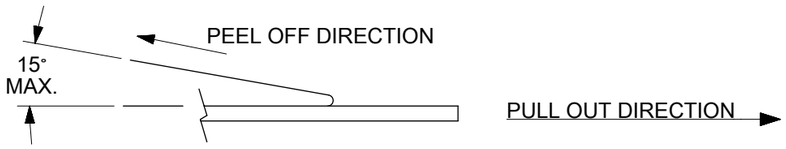

3. PACKAGING STANDARD IS AS PER EIA-481.
4. TAPE & REEL QUANTITY = SEE TABLE A FOR QTY / REEL.

TABLE A

PART NO IN T&R	QTY/REEL
87381-9013	500
87381-9016	800
87381-9030	800
87381-9015	800
87381-9027	800
87381-9028	800

THIS DRAWING CONTAINS INFORMATION THAT IS PROPRIETARY TO MOLEX ELECTRONIC TECHNOLOGIES, LLC AND SHOULD NOT BE USED WITHOUT WRITTEN PERMISSION

SYMBOLS: F/A = 0; F/C = 0; F/B = 0; S = 0; ▼ = 0; C = 0; ☒ = 0; ■ = 0; ▽ = 0

DIMENSION UNITS: mm | SCALE: NTS

GENERAL TOLERANCES (UNLESS SPECIFIED)
ANGULAR TOL ± 3.0°
4 PLACES ±
3 PLACES ±
2 PLACES ± 0.2
1 PLACE ±
0 PLACES ±

DRAFT WHERE APPLICABLE MUST REMAIN WITHIN DIMENSIONS

CURRENT REV DESC:
EC NO: 736158
DRWN: DANUSA 2023/01/23
CHK'D: DANUSA 2023/01/25
APPR: MRAMAKRISHNA 2023/02/03
INITIAL REVISION:
DRWN: SCS02 2018/08/07
APPR: MRAMAKRISHNA 2019/07/09

THIRD ANGLE PROJECTION | DRAWING: A3-SIZE | SERIES: 87381

molex

MGRID TOP ENTRY RECEPTACLE
4MM HEIGHT, SMT.

PRODUCT CUSTOMER DRAWING

DOCUMENT NUMBER	DOC TYPE	DOC PART	REVISION
873810001-SD	PSD	000	A2

MATERIAL NUMBER	CUSTOMER	SHEET NUMBER
	GENERAL MARKET	2 OF 7

DOCUMENT STATUS	P1	RELEASE DATE	2023/02/03 08:12:09

FORMAT: master-tb-prod-A3
REVISION: H
DATE: 2018/01/18

CKT. SIZE	PART W/O CAP IN TUBE	PART NO. WITH CAP IN TUBE	PART NO. WITH CAP IN T&R	PLATING FINISH	PEG	A	B	W	So	Ao	F	Bo	Ko
04	---	87381-0405	---	1	NO	2.00	4.00	---	---	---	---	---	---
	---	87381-0409	---	2									
	---	87381-0415	---	1	YES								
	---	87381-0419	---	2									
06	87381-0607	87381-0605	---	1	NO	4.00	6.00	24.00	---	7.00	11.50	6.50	4.80
	87381-0608	87381-0609	---	2									
	87381-0637	---	---	3									
	87381-0617	87381-0615	87381-9012	1	YES								
	87381-0618	87381-0619	87381-9013	2									
	87381-0638	---	87381-9011	3									
08	87381-0807	87381-0805	---	1	NO	6.00	8.00	24.00	---	7.00	11.50	8.50	4.80
	87381-0808	87381-0809	---	2									
	87381-0837	---	---	3									
	87381-0817	87381-0815	---	1	YES								
	87381-0818	87381-0819	87381-9016	2									
	87381-0838	---	---	3									
10	87381-1007	87381-1005	---	1	NO	8.00	10.00	24.00	---	7.00	11.50	10.50	4.80
	87381-1008	87381-1009	---	2									
	87381-1037	---	---	3									
	87381-1017	87381-1015	87381-9030	1	YES								
	87381-1018	87381-1019	---	2									
	87381-1038	---	---	3									
12	87381-1207	87381-1205	---	1	NO	10.00	12.00	---	---	---	---	---	---
	87381-1208	87381-1209	---	2									
	87381-1237	---	---	3									
	87381-1217	87381-1215	---	1	YES								
	87381-1218	87381-1219	---	2									
	87381-1238	---	---	3									
14	87381-1407	87381-1405	---	1	NO	12.00	14.00	---	---	---	---	---	---
	87381-1408	87381-1409	---	2									
	87381-1437	---	---	3									
	87381-1417	87381-1415	---	1	YES								
	87381-1418	87381-1419	---	2									
	87381-1438	---	---	3									

SYMBOLS	DIMENSION UNITS	SCALE
E = 0	mm	NTS
E = 0	GENERAL TOLERANCES (UNLESS SPECIFIED)	
E = 0	ANGULAR TOL ± 3.0 °	
S = 0	4 PLACES ±	
= 0	3 PLACES ±	
C = 0	2 PLACES ± 0.2	
= 0	1 PLACE ±	
= 0	0 PLACES ±	
= 0	DRAFT WHERE APPLICABLE MUST REMAIN WITHIN DIMENSIONS	
= 0		

THIS DRAWING CONTAINS INFORMATION THAT IS PROPRIETARY TO MOLEX ELECTRONIC TECHNOLOGIES, LLC AND SHOULD NOT BE USED WITHOUT WRITTEN PERMISSION

CURRENT REV DESC:

EC NO: 736158
DRWN: DANUSA 2023/01/23
CHK'D: DANUSA 2023/01/25
APPR: MRAMAKRISHNA 2023/02/03

INITIAL REVISION:
DRWN: SCS02 2018/08/07
APPR: MRAMAKRISHNA 2019/07/09

THIRD ANGLE PROJECTION | DRAWING: A3-SIZE | SERIES: 87381

molex

MGRID TOP ENTRY RECEPTACLE
4MM HEIGHT, SMT.

PRODUCT CUSTOMER DRAWING

DOCUMENT NUMBER	DOC TYPE	DOC PART	REVISION
873810001-SD	PSD	000	A2

MATERIAL NUMBER	CUSTOMER	SHEET NUMBER
	GENERAL MARKET	3 OF 7

DOCUMENT STATUS	P1	RELEASE DATE	2023/02/03 08:12:09

FORMAT: master-tb-prod-A3
REVISION: H
DATE: 2018/01/18

CKT. SIZE	PART W/O CAP IN TUBE	PART NO. WITH CAP IN TUBE	PART NO. WITH CAP IN T&R	PLATING FINISH	PEG	A	B	W	So	Ao	F	Bo	Ko
16	87381-1607	87381-1605	---	1	NO	14.00	16.00	TBD	TBD	TBD	TBD	TBD	TBD
	87381-1608	87381-1609	---	2									
	87381-1637	---	---	3									
	87381-1617	87381-1615	87381-1627	1	YES								
	87381-1618	87381-1619	---	2									
	87381-1638	---	---	3									
18	87381-1807	87381-1805	---	1	NO	16.00	18.00	---	---	---	---	---	---
	87381-1808	87381-1809	---	2									
	87381-1837	---	---	3									
	87381-1817	87381-1815	87381-1820	A2 1	YES								
	87381-1818	87381-1819	---	2									
	87381-1838	---	---	3									
20	87381-2007	87381-2005	---	1	NO	18.00	20.00	---	---	---	---	---	---
	87381-2008	87381-2009	---	2									
	87381-2037	---	---	3									
	87381-2017	87381-2015	---	1	YES								
	87381-2018	87381-2019	---	2									
	87381-2038	---	---	3									
22	87381-2207	87381-2205	---	1	NO	20.00	22.00	---	---	---	---	---	---
	87381-2208	87381-2209	---	2									
	87381-2237	---	---	3									
	87381-2217	87381-2215	---	1	YES								
	87381-2218	87381-2219	---	2									
	87381-2238	---	---	3									
24	87381-2407	87381-2405	---	1	NO	22.00	24.00	---	---	---	---	---	---
	87381-2408	87381-2409	---	2									
	87381-2437	---	---	3									
	87381-2417	87381-2415	---	1	YES								
	87381-2418	87381-2419	---	2									
	87381-2438	---	---	3									
26	87381-2607	87381-2605	---	1	NO	24.00	26.00	---	---	---	---	---	---
	87381-2608	87381-2609	---	2									
	87381-2637	---	---	3									
	87381-2617	87381-2615	87381-2620	A1 1	YES			44	40.40	6.60	20.20	26.35	5.60
	87381-2618	87381-2619	---	2									
	87381-2638	---	---	3									

SYMBOLS	
EA	= 0
EC	= 0
EF	= 0
S	= 0
▼	= 0
C	= 0
☒	= 0
■	= 0
▽	= 0

THIS DRAWING CONTAINS INFORMATION THAT IS PROPRIETARY TO MOLEX ELECTRONIC TECHNOLOGIES, LLC AND SHOULD NOT BE USED WITHOUT WRITTEN PERMISSION

DIMENSION UNITS	SCALE
mm	NTS

GENERAL TOLERANCES (UNLESS SPECIFIED)

ANGULAR TOL	± 3.0 °
4 PLACES	±
3 PLACES	±
2 PLACES	± 0.2
1 PLACE	±
0 PLACES	±

DRAFT WHERE APPLICABLE MUST REMAIN WITHIN DIMENSIONS

CURRENT REV DESC:

EC NO: 736158
DRWN: DANUSA 2023/01/23
CHK'D: DANUSA 2023/01/25
APPR: MRAMAKRISHNA 2023/02/03

INITIAL REVISION:
DRWN: SCS02 2018/08/07
APPR: MRAMAKRISHNA 2019/07/09

THIRD ANGLE PROJECTION | DRAWING: A3-SIZE | SERIES: 87381

molex

MGRID TOP ENTRY RECEPTACLE
4MM HEIGHT, SMT.

PRODUCT CUSTOMER DRAWING

DOCUMENT NUMBER	DOC TYPE	DOC PART	REVISION
873810001-SD	PSD	000	A2

MATERIAL NUMBER	CUSTOMER	SHEET NUMBER
	GENERAL MARKET	4 OF 7

DOCUMENT STATUS	P1	RELEASE DATE	2023/02/03 08:12:09

FORMAT: master-tb-prod-A3
REVISION: H
DATE: 2018/01/18

CKT. SIZE	PART W/O CAP IN TUBE	PART NO. WITH CAP IN TUBE	PART NO. WITH CAP IN T&R	PLATING FINISH	PEG	A	B	W	So	Ao	F	Bo	Ko
28	87381-2807	87381-2805	---	1	NO	30.00	28.00	---	---	---	---	---	---
	87381-2808	87381-2809	---	2									
	87381-2837	---	---	3									
	87381-2817	87381-2815	---	1	YES								
	87381-2818	87381-2819	---	2									
	87381-2838	---	---	3									
30	87381-3007	87381-3005	---	1	NO	28.00	30.00	56.00	52.40	7.00	26.20	30.50	4.80
	87381-3008	87381-3009	---	2									
	87381-3037	---	---	3									
	87381-3017	87381-3015	87381-9015	1	YES								
	87381-3018	87381-3019	---	2									
	87381-3038	---	---	3									
32	87381-3207	87381-3205	---	1	NO	30.00	32.00	---	---	---	---	---	---
	87381-3208	87381-3209	---	2									
	87381-3237	---	---	3									
	87381-3217	87381-3215	---	1	YES								
	87381-3218	87381-3219	---	2									
	87381-3238	---	---	3									
34	87381-3407	87381-3405	---	1	NO	32.00	34.00	---	---	---	---	---	---
	87381-3408	87381-3409	---	2									
	87381-3437	---	---	3									
	87381-3417	87381-3415	---	1	YES								
	87381-3418	87381-3419	---	2									
	87381-3438	---	---	3									
36	87381-3607	87381-3605	---	1	NO	34.00	36.00	---	---	---	---	---	---
	87381-3608	87381-3609	---	2									
	87381-3637	---	---	3									
	87381-3617	87381-3615	---	1	YES								
	87381-3618	87381-3619	---	2									
	87381-3638	---	---	3									
38	87381-3807	87381-3805	---	1	NO	36.00	38.00	---	---	---	---	---	---
	87381-3808	87381-3809	---	2									
	87381-3837	---	---	3									
	87381-3817	87381-3815	---	1	YES								
	87381-3818	87381-3819	---	2									
	87381-3838	---	---	3									

SYMBOLS
E = 0
C = 0
F = 0
S = 0
▼ = 0
C = 0
☒ = 0
■ = 0
▽ = 0

THIS DRAWING CONTAINS INFORMATION THAT IS PROPRIETARY TO MOLEX ELECTRONIC TECHNOLOGIES, LLC AND SHOULD NOT BE USED WITHOUT WRITTEN PERMISSION

DIMENSION UNITS	SCALE
mm	NTS

GENERAL TOLERANCES (UNLESS SPECIFIED)

ANGULAR TOL	± 3.0 °
4 PLACES	±
3 PLACES	±
2 PLACES	± 0.2
1 PLACE	±
0 PLACES	±

DRAFT WHERE APPLICABLE MUST REMAIN WITHIN DIMENSIONS

CURRENT REV DESC:

EC NO: 736158
DRWN: DANUSA 2023/01/23
CHK'D: DANUSA 2023/01/25
APPR: MRAMAKRISHNA 2023/02/03

INITIAL REVISION:
DRWN: SCS02 2018/08/07
APPR: MRAMAKRISHNA 2019/07/09

THIRD ANGLE PROJECTION | DRAWING: A3-SIZE | SERIES: 87381

molex

MGRID TOP ENTRY RECEPTACLE
4MM HEIGHT, SMT.

PRODUCT CUSTOMER DRAWING

DOCUMENT NUMBER	DOC TYPE	DOC PART	REVISION
873810001-SD	PSD	000	A2

MATERIAL NUMBER	CUSTOMER	SHEET NUMBER
	GENERAL MARKET	5 OF 7

DOCUMENT STATUS	P1	RELEASE DATE	2023/02/03 08:12:09

FORMAT: master-lb-prod-A3
REVISION: H
DATE: 2018/01/18

CKT. SIZE	PART W/O CAP IN TUBE	PART NO. WITH CAP IN TUBE	PART NO. WITH CAP IN T&R	PLATING FINISH	PEG	A	B	W	So	Ao	F	Bo	Ko
40	87381-4007	87381-4005	---	1	NO	38.00	40.00	---	---	---	---	---	---
	87381-4008	87381-4009	---	2									
	87381-4037	---	---	3									
	87381-4017	87381-4015	---	1	YES								
	87381-4018	87381-4019	---	2									
	87381-4038	---	---	3									
42	87381-4207	87381-4205	---	1	NO	40.00	42.00	---	---	---	---	---	---
	87381-4208	87381-4209	---	2									
	87381-4237	---	---	3									
	87381-4217	87381-4215	---	1	YES								
	87381-4218	87381-4219	---	2									
	87381-4238	---	---	3									
44	87381-4407	87381-4405	---	1	NO	42.00	44.00	---	---	---	---	---	---
	87381-4408	87381-4409	---	2									
	87381-4437	---	---	3									
	87381-4417	87381-4415	---	1	YES								
	87381-4418	87381-4419	---	2									
	87381-4438	---	---	3									
46	87381-4607	87381-4605	---	1	NO	44.00	46.00	---	---	---	---	---	---
	87381-4608	87381-4609	---	2									
	87381-4637	---	---	3									
	87381-4617	87381-4615	---	1	YES								
	87381-4618	87381-4619	---	2									
	87381-4638	---	---	3									
48	87381-4807	87381-4805	---	1	NO	46.00	48.00	---	---	---	---	---	---
	87381-4808	87381-4809	---	2									
	87381-4837	---	---	3									
	87381-4817	87381-4815	---	1	YES								
	87381-4818	87381-4819	---	2									
	87381-4838	---	---	3									
50	87381-5007	87381-5005	---	1	NO	48.00	50.00	72.00	68.40	7.00	34.20	50.50	4.80
	87381-5008	87381-5009	---	2									
	87381-5037	---	---	3									
	87381-5017	87381-5015	87381-9028	1	YES								
	87381-5018	87381-5019	87381-9027	2									
	87381-5038	---	---	3									

SYMBOLS
- = 0
- = 0
- = 0
- = 0
- = 0
- = 0
- = 0
- = 0
- = 0

THIS DRAWING CONTAINS INFORMATION THAT IS PROPRIETARY TO MOLEX ELECTRONIC TECHNOLOGIES, LLC AND SHOULD NOT BE USED WITHOUT WRITTEN PERMISSION

DIMENSION UNITS: mm | SCALE: NTS

GENERAL TOLERANCES (UNLESS SPECIFIED)
ANGULAR TOL ± 3.0°
4 PLACES ±
3 PLACES ±
2 PLACES ± 0.2
1 PLACE ±
0 PLACES ±

DRAFT WHERE APPLICABLE MUST REMAIN WITHIN DIMENSIONS

CURRENT REV DESC:

EC NO: 736158
DRWN: DANUSA 2023/01/23
CHK'D: DANUSA 2023/01/25
APPR: MRAMAKRISHNA 2023/02/03

INITIAL REVISION:
DRWN: SCS02 2018/08/07
APPR: MRAMAKRISHNA 2019/07/09

THIRD ANGLE PROJECTION | DRAWING: A3-SIZE | SERIES: 87381

molex

MGRID TOP ENTRY RECEPTACLE
4MM HEIGHT, SMT.

PRODUCT CUSTOMER DRAWING

DOCUMENT NUMBER	DOC TYPE	DOC PART	REVISION
873810001-SD	PSD	000	A2

MATERIAL NUMBER	CUSTOMER	SHEET NUMBER
	GENERAL MARKET	6 OF 7

DOCUMENT STATUS	P1	RELEASE DATE	2023/02/03 08:12:09

FORMAT: master-tb-prod-A3
REVISION: H
DATE: 2018/01/18

BOARD TO BOARD (BTB) DISTANCE

RECEPTACLE	MATES WITH(HEADER)	BTB DISTANCE	PICTORIAL VIEW
87381	87831	7.01	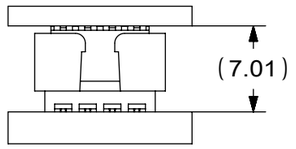
	87832	8.21	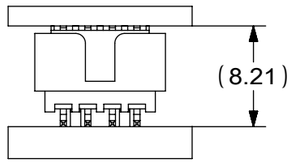

THIS DRAWING CONTAINS INFORMATION THAT IS PROPRIETARY TO MOLEX ELECTRONIC TECHNOLOGIES, LLC AND SHOULD NOT BE USED WITHOUT WRITTEN PERMISSION

SYMBOLS	
EA = 0	
EC = 0	
EB = 0	
S = 0	
▼ = 0	
C = 0	
☒ = 0	
■ = 0	
▽ = 0	

DIMENSION UNITS	SCALE
mm	NTS

GENERAL TOLERANCES (UNLESS SPECIFIED)	
ANGULAR TOL	± 3.0 °
4 PLACES	±
3 PLACES	±
2 PLACES	± 0.2
1 PLACE	±
0 PLACES	±

DRAFT WHERE APPLICABLE MUST REMAIN WITHIN DIMENSIONS

CURRENT REV DESC:

EC NO: 736158
DRWN: DANUSA 2023/01/23
CHK'D: DANUSA 2023/01/25
APPR: MRAMAKRISHNA 2023/02/03

INITIAL REVISION:
DRWN: SCS02 2018/08/07
APPR: MRAMAKRISHNA 2019/07/09

THIRD ANGLE PROJECTION | DRAWING: A3-SIZE | SERIES: 87381

molex

MGRID TOP ENTRY RECEPTACLE
4MM HEIGHT, SMT.

PRODUCT CUSTOMER DRAWING

DOCUMENT NUMBER	DOC TYPE	DOC PART	REVISION
873810001-SD	PSD	000	A2

MATERIAL NUMBER	CUSTOMER	SHEET NUMBER
	GENERAL MARKET	7 OF 7

DOCUMENT STATUS	P1	RELEASE DATE	2023/02/03 08:12:09

FORMAT: master_Sheet-A3
REVISION: H
DATE: 2018/01/16

FEATURES SELECTION GUIDE

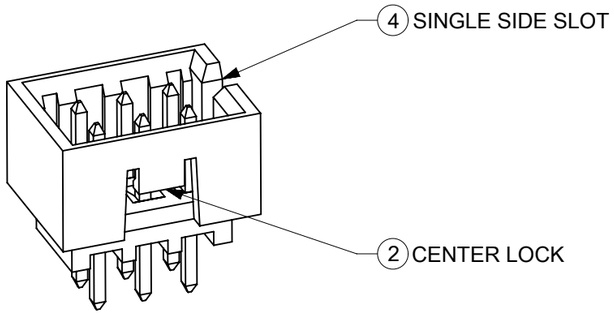

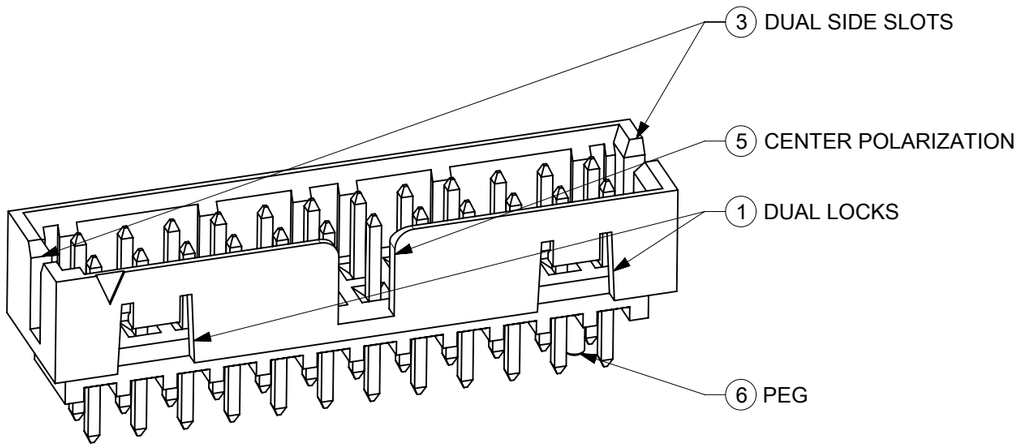

CIRCUIT SIZE	FEATURES						SHEET NO
	FRICTION LOCKS		SIDE SLOTS		(5) CENTER POLARIZATION	(6) PEG	
	(1) DUAL	(2) CENTER	(3) DUAL	(4) SINGLE			
4	N.A	N.A	YES	N.A	N.A	N.A	2 - 3
	N.A	YES	YES	N.A	N.A	N.A	
	N.A	YES	N.A	YES	N.A	N.A	
6	N.A	N.A	YES	N.A	N.A	N.A	4 - 5
	N.A	N.A	YES	N.A	N.A	YES	
	N.A	YES	YES	N.A	N.A	N.A	
	N.A	YES	YES	N.A	N.A	YES	
	N.A	YES	N.A	YES	N.A	N.A	
	N.A	YES	N.A	YES	N.A	YES	
	N.A	N.A	YES	N.A	YES	N.A	
8 TO 12	N.A	N.A	YES	N.A	YES	N.A	6 - 8
	N.A	N.A	YES	N.A	YES	YES	
	N.A	YES	YES	N.A	N.A	N.A	
	N.A	YES	YES	N.A	N.A	YES	
	N.A	YES	N.A	YES	N.A	N.A	
	N.A	YES	N.A	YES	N.A	YES	
14 TO 50	YES	N.A	YES	N.A	YES	N.A	9 - 13
	YES	N.A	YES	N.A	YES	YES	

PACKAGING SPECIFICATION TABLE

TAPE AND REEL PACKAGING	PK-87831-300
TUBE STANDARD PACKAGING	PK-87831-001
TUBE NON-STANDARD PACKAGING FOR: 87831-0419 87831-0645 87831-5141 87831-5119 87831-0443 87831-1011 87831-5241 87831-1420 87831-5242 87831-0643	PK-87831-002

THIS DRAWING CONTAINS INFORMATION THAT IS PROPRIETARY TO MOLEX ELECTRONIC TECHNOLOGIES, LLC AND SHOULD NOT BE USED WITHOUT WRITTEN PERMISSION

DIMENSION UNITS: mm	SCALE: NTS	CURRENT REV DESC: REMOVED OBSOLETED PART NUMBERS AS PER PCN#512581.	molex
GENERAL TOLERANCES (UNLESS SPECIFIED)			MILLIGRID 2MM PITCH, THROUGH HOLE VERTICAL SHROUDED HEADER
MM / INCH		EC NO: 761863	PRODUCT CUSTOMER DRAWING
4 PLACES ± / ±		DRWN: SUAIFR 2023/08/14	DOCUMENT NUMBER: SD-87831-0001
3 PLACES ± / ±		CHK'D: GGA 2023/09/11	DOC TYPE: PSD
2 PLACES ± 0.2 / ±		APPR: GGA 2023/09/11	DOC PART: 001
1 PLACE ± / ±		INITIAL REVISION:	REVISION: A24
0 PLACES ± / ±		DRWN: GMENARLY 2015/04/15	
ANGULAR TOL ± 3.0 °		APPR: KHLIM 2015/06/29	
DRAFT WHERE APPLICABLE MUST REMAIN WITHIN DIMENSIONS	THIRD ANGLE PROJECTION	DRAWING: A3-SIZE	SERIES: 87831
		MATERIAL NUMBER: SEE TABLE	CUSTOMER: GENERAL MARKET
			SHEET NUMBER: 1 OF 14

DOCUMENT STATUS	P1	RELEASE DATE	2023/09/11 04:36:51

FORMAT: Mel-lega-master-tb-prod-A3
REVISION: E1
DATE: 2021/05/01

4 CIRCUITS

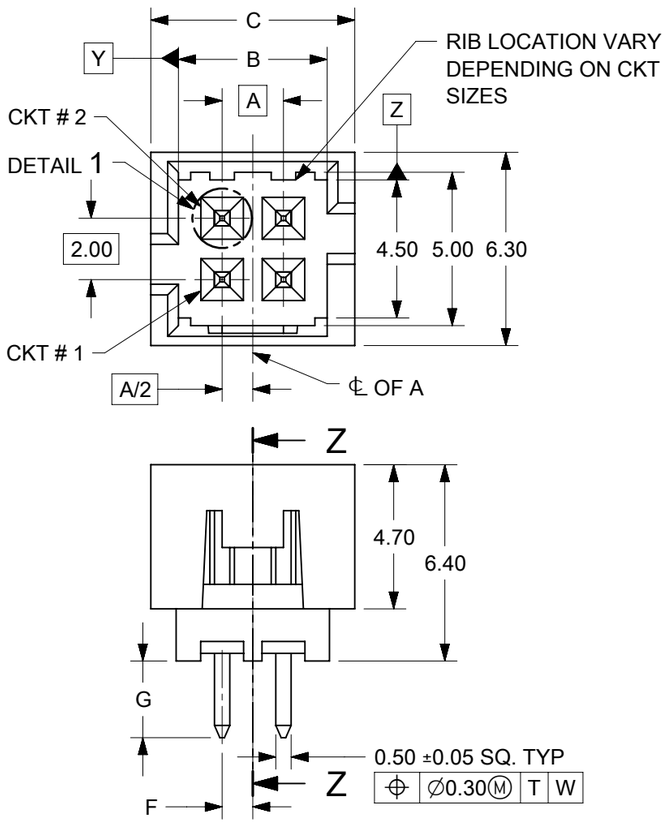

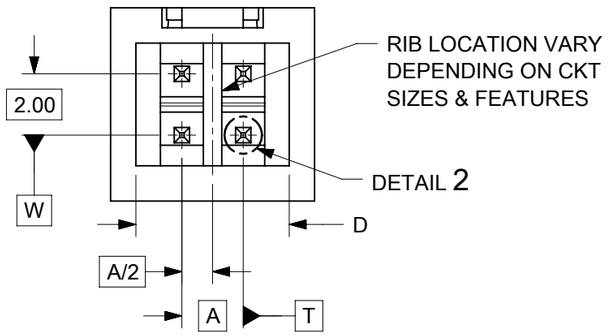

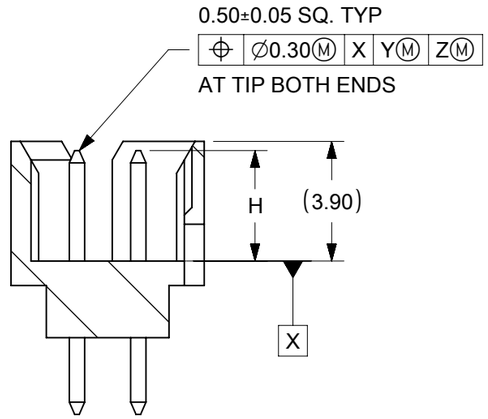

SECTION Z-Z

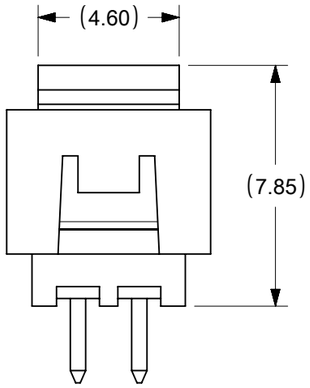

VIEW FOR HEADER WITH CAP

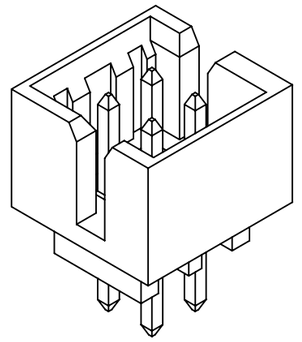

VIEW FOR HEADER WITH ONLY DUAL SLOTS

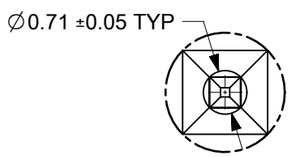

DETAIL 1

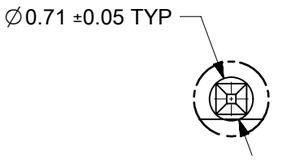

DETAIL 2

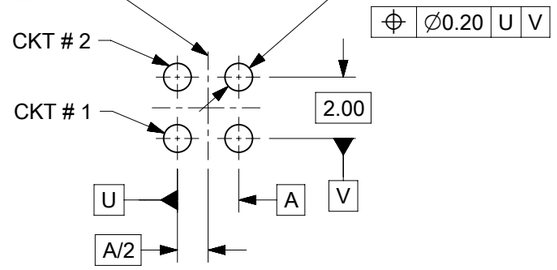

RECOMMENDED PCB LAYOUT

NOTES:
1. MATERIALS:
   HOUSING: 30% GF, NYLON, UL94V-0, COLOR: BLACK
   PIN: 0.50mm SQ. PHOSPHOR BRONZE
2. FINISHES: REFER TO PLATING OPTIONS
3. PRODUCT SPECIFICATION: PS-87831-027
4. PACKAGING SPECIFICATION: SEE PACKAGING SPECS TABLE ON SHEET 1
5. MATES WITH: A. MOLEX CRIMP RECEPTACLE HOUSING: 51110 SERIES
   AND CRIMP TERMINAL: 50394 SERIES
   B. MOLEX 2mm MILLIGRID DUAL ROW IDT: 87568 SERIES
   C. MOLEX 2mm MILLIGRID DUAL ROW RECEPTACLE:
   79107 (GOLD PLATED), 78787 (TIN PLATED)

DOCUMENT STATUS	P1	RELEASE DATE	2023/09/11 04:36:51

THIS DRAWING CONTAINS INFORMATION THAT IS PROPRIETARY TO MOLEX ELECTRONIC TECHNOLOGIES, LLC AND SHOULD NOT BE USED WITHOUT WRITTEN PERMISSION

DIMENSION UNITS	SCALE
mm	NTS

GENERAL TOLERANCES (UNLESS SPECIFIED)

	MM	INCH
4 PLACES	±	±
3 PLACES	±	±
2 PLACES	± 0.2	±
1 PLACE	±	±
0 PLACES	±	±
ANGULAR TOL	± 3.0 °	

DRAFT WHERE APPLICABLE MUST REMAIN WITHIN DIMENSIONS

CURRENT REV DESC: REMOVED OBSOLETED PART NUMBERS AS PER PCN#512581.

EC NO: 761863
DRWN: SUAIFR 2023/08/14
CHK'D: GGA 2023/09/11
APPR: GGA 2023/09/11

INITIAL REVISION:
DRWN: GMENARLY 2015/04/15
APPR: KHLIM 2015/06/29

THIRD ANGLE PROJECTION | DRAWING: A3-SIZE | SERIES: 87831

molex

MILLIGRID
2MM PITCH, THROUGH HOLE VERTICAL SHROUDED HEADER

PRODUCT CUSTOMER DRAWING

DOCUMENT NUMBER	DOC TYPE	DOC PART	REVISION
SD-87831-0001	PSD	001	A24

MATERIAL NUMBER	CUSTOMER	SHEET NUMBER
SEE TABLE	GENERAL MARKET	2 OF 14

FORMAT: Mel-lega-master-lb-prod-A3
REVISION: E1
DATE: 2021/05/01

4 CIRCUITS

CKT SIZE	ASSY P/N WITHOUT CAP IN TUBE	ASSY P/N WITH CAP IN TUBE	ASSY P/N WITH CAP IN T&R	PLATING OPTIONS	FRICTION LOCKS		SIDE SLOTS		CENTER POLARIZATION	PEG	DIMENSION							
					DUAL	CENTER	DUAL	SINGLE			A	B	C	D	E	F	G	H
4	87831-0419	N.A	N.A	1	N.A	N.A	YES	N.A	N.A	N.A	2.00	4.85	6.65	5.00	N.A	N.A	2.50	3.60±0.20
	87831-0420	N.A	N.A	2														
	87831-0421	N.A	N.A	3														
	87831-0436	N.A	N.A	4														
	87831-0441	87831-0456	N.A	2	N.A	YES	YES	N.A	N.A	N.A						1.00	2.50	
	87831-0442	N.A	87831-5565	3														
	87831-5141	N.A	N.A	2	N.A	YES	YES	N.A	N.A	N.A							3.50	
	87831-5142	N.A	N.A	3														
	87831-6141	N.A	N.A	2	N.A	YES	YES	N.A	N.A	N.A							2.80	
	87831-6142	N.A	N.A	3														
	87831-0443	N.A	N.A	2	N.A	YES	N.A	YES	N.A	N.A							2.50	$3.60^{+0.15}_{-0.10}$
	87831-0444	N.A	N.A	3														

PLATING OPTIONS:

1 - 0.05-0.13µm/2-5µin GOLD IN CONTACT AREA AND
1.88µm/75µin MIN. MATTE TIN IN SOLDER TAIL AREA OVER
1.27µm/50µin MIN. NICKEL OVERALL.

2 - 0.38µm/15µin GOLD IN CONTACT AREA AND
1.88µm/75µin MIN. MATTE TIN IN SOLDER TAIL AREA OVER
1.27µm/50µin MIN. NICKEL OVERALL.

3 - 0.76µm/30µin GOLD IN CONTACT AREA AND
1.88µm/75µin MIN. MATTETIN IN SOLDER TAIL AREA OVER
1.27µm/50µin MIN. NICKEL OVERALL.

4 - 2.50µm/100µin MIN. MATTE TIN OVER 1.25µm/50µin MIN. NICKEL OVERALL.

THIS DRAWING CONTAINS INFORMATION THAT IS PROPRIETARY TO MOLEX ELECTRONIC TECHNOLOGIES, LLC AND SHOULD NOT BE USED WITHOUT WRITTEN PERMISSION

DIMENSION UNITS	SCALE
mm	NTS

GENERAL TOLERANCES (UNLESS SPECIFIED)

	MM	INCH
4 PLACES	±	±
3 PLACES	±	±
2 PLACES	± 0.2	±
1 PLACE	±	±
0 PLACES	±	±
ANGULAR TOL	± 3.0 °	

DRAFT WHERE APPLICABLE MUST REMAIN WITHIN DIMENSIONS

CURRENT REV DESC: REMOVED OBSOLETED PART NUMBERS AS PER PCN#512581.

EC NO: 761863
DRWN: SUAIFR 2023/08/14
CHK'D: GGA 2023/09/11
APPR: GGA 2023/09/11

INITIAL REVISION:
DRWN: GMENARLY 2015/04/15
APPR: KHLIM 2015/06/29

THIRD ANGLE PROJECTION | DRAWING: A3-SIZE | SERIES: 87831

molex

MILLIGRID
2MM PITCH, THROUGH HOLE VERTICAL SHROUDED HEADER

PRODUCT CUSTOMER DRAWING

DOCUMENT NUMBER	DOC TYPE	DOC PART	REVISION
SD-87831-0001	PSD	001	A24

MATERIAL NUMBER	CUSTOMER	SHEET NUMBER
SEE TABLE	GENERAL MARKET	3 OF 14

DOCUMENT STATUS	P1	RELEASE DATE	2023/09/11 04:36:51

FORMAT: Mel-lega-master-tb-prod-A3
REVISION: E1
DATE: 2021/05/01

6 CIRCUITS

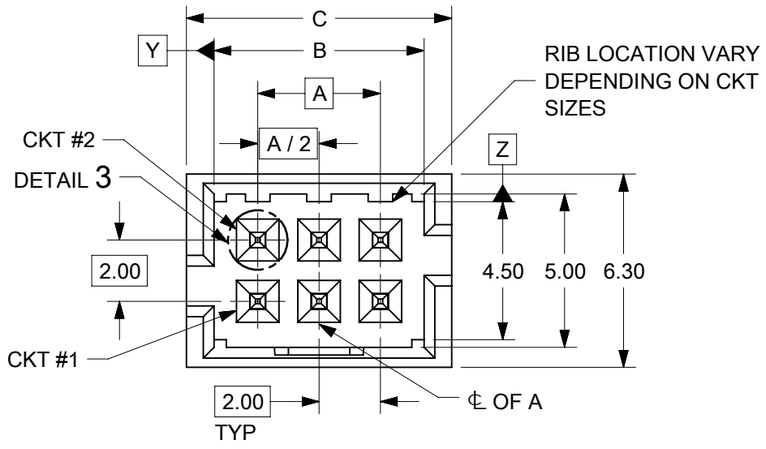

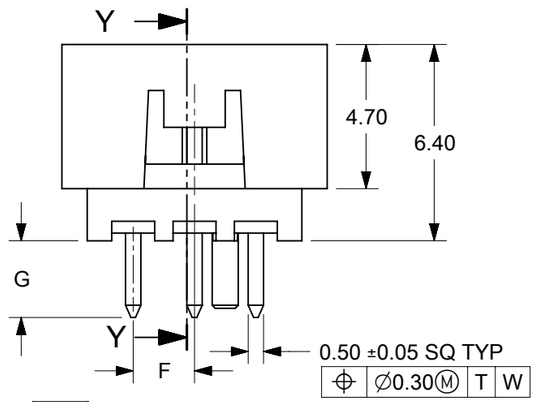

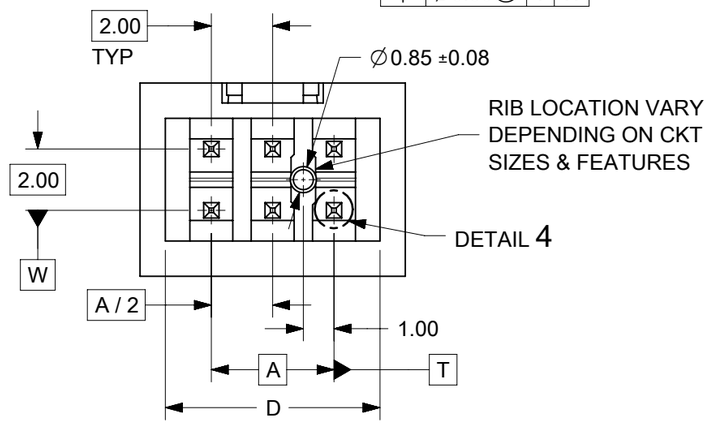

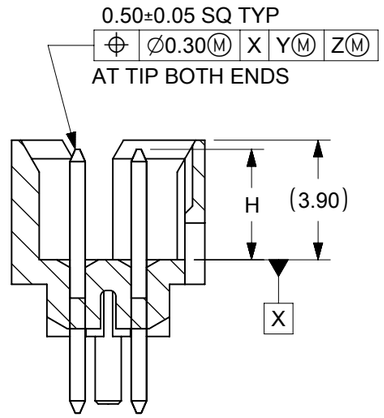

SECTION Y-Y

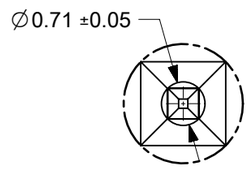

DETAIL 3

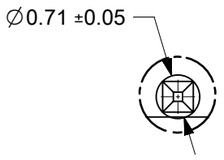

DETAIL 4

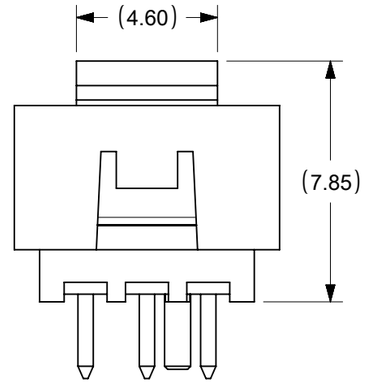

VIEW FOR
HEADER WITH CAP

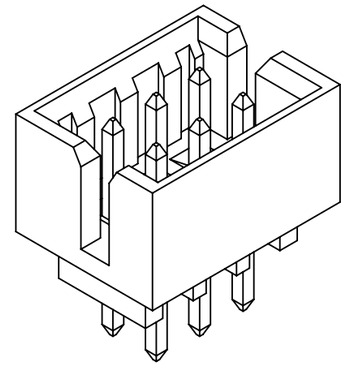

VIEW FOR HEADER WITH
ONLY DUAL SLOTS

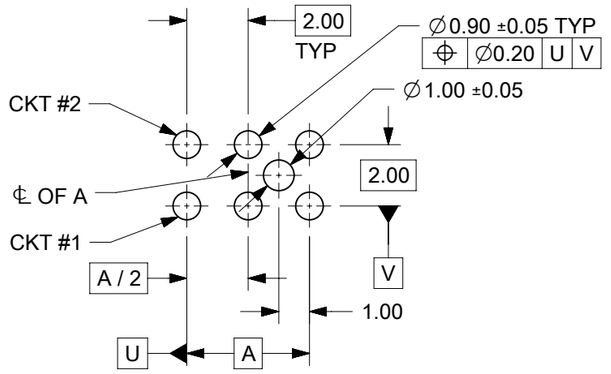

RECOMMENDED PCB LAYOUT

NOTES:
1. MATERIALS:
   HOUSING: 30% GF, NYLON, UL94V-0, COLOR: BLACK
   PIN: 0.50mm SQ PHOSPHOR BRONZE
2. FINISHES: REFER TO PLATING OPTIONS
3. PRODUCT SPECIFICATION: PS-87831-027
4. PACKAGING SPECIFICATION: SEE PACKAGING SPECS TABLE ON SHEET 1
5. MATES WITH: A. MOLEX CRIMP RECEPTACLE HOUSING: 51110 SERIES
   AND CRIMP TERMINAL: 50394 SERIES
   B. MOLEX 2mm MILLIGRID DUAL ROW IDT: 87568 SERIES
   C. MOLEX 2mm MILLIGRID DUAL ROW RECEPTACLE:
   79107 (GOLD PLATED), 78787 (TIN PLATED)

THIS DRAWING CONTAINS INFORMATION THAT IS PROPRIETARY TO MOLEX ELECTRONIC TECHNOLOGIES, LLC AND SHOULD NOT BE USED WITHOUT WRITTEN PERMISSION

DIMENSION UNITS	SCALE
mm	NTS

GENERAL TOLERANCES (UNLESS SPECIFIED)

	MM	INCH
4 PLACES	±	±
3 PLACES	±	±
2 PLACES	± 0.2	±
1 PLACE	±	±
0 PLACES	±	±
ANGULAR TOL	± 3.0 °	

DRAFT WHERE APPLICABLE MUST REMAIN WITHIN DIMENSIONS

CURRENT REV DESC: REMOVED OBSOLETED PART NUMBERS AS PER PCN#512581.

EC NO: 761863
DRWN: SUAIFR 2023/08/14
CHK'D: GGA 2023/09/11
APPR: GGA 2023/09/11

INITIAL REVISION:
DRWN: GMENARLY 2015/04/15
APPR: KHLIM 2015/06/29

THIRD ANGLE PROJECTION | DRAWING: A3-SIZE | SERIES: 87831

molex

MILLIGRID
2MM PITCH, THROUGH HOLE VERTICAL SHROUDED HEADER

PRODUCT CUSTOMER DRAWING

DOCUMENT NUMBER	DOC TYPE	DOC PART	REVISION
SD-87831-0001	PSD	001	A24

MATERIAL NUMBER	CUSTOMER	SHEET NUMBER
SEE TABLE	GENERAL MARKET	4 OF 14

DOCUMENT STATUS	P1	RELEASE DATE	2023/09/11 04:36:51

FORMAT: Met-lega-master-tb-prod-A3
REVISION: E1
DATE: 2021/05/01

6 CIRCUITS

CKT SIZE	ASSY P/N WITHOUT CAP IN TUBE	ASSY P/N WITH CAP IN TUBE	ASSY P/N WITH CAP IN T&R	PLATING OPTIONS	FRICTION LOCKS		SIDE SLOTS		CENTER POLARIZATION	PEG	DIMENSION							
					DUAL	CENTER	DUAL	SINGLE			A	B	C	D	E	F	G	H
6	87831-0619	N.A	N.A	1	N.A	N.A	YES	N.A	N.A	N.A	4.00	6.85	8.65	7.00	N.A	N.A	2.50	3.60±0.20
	87831-0620	N.A	N.A	2														
	87831-0621	N.A	N.A	3														
	87831-0636	N.A	N.A	4														
	87831-0628	N.A	N.A	2	N.A	N.A	YES	N.A	N.A	YES						N.A	2.50	
	87831-0629	N.A	N.A	3														
	87831-0641	N.A	87831-0647	2	N.A	YES	YES	N.A	N.A	N.A						2.00	2.50	
	87831-0642	N.A	87831-5552	3														
	87831-5241	N.A	N.A	2	N.A	YES	YES	N.A	N.A	N.A							3.50	
	87831-5242	N.A	N.A	3														
	87831-6241	N.A	N.A	2	N.A	YES	YES	N.A	N.A	N.A							2.80	
	87831-6242	N.A	N.A	3														
	87831-0643	N.A	N.A	2	N.A	YES	N.A	YES	N.A	N.A							2.50	
	87831-0644	N.A	N.A	3														
	87831-0645	N.A	N.A	2	N.A	YES	N.A	YES	N.A	YES							2.50	3.60 +0.15 -0.10
	87831-0646	N.A	N.A	3														
	87831-0632	N.A	N.A	2	N.A	YES	YES	N.A	N.A	YES							2.50	
	87831-5119	N.A	N.A	1	N.A	N.A	YES	N.A	YES	N.A						N.A	2.50	3.60±0.20
	87831-5121	N.A	N.A	3														
	87831-5136	N.A	N.A	4														

PLATING OPTIONS:

1 - 0.05-0.13µm/2-5µin GOLD IN CONTACT AREA AND
1.88µm/75µin MIN. MATTE TIN IN SOLDER TAIL AREA OVER
1.27µm/50µin MIN. NICKEL OVERALL.
2 - 0.38µm/15µin GOLD IN CONTACT AREA AND
1.88µm/75µin MIN. MATTE TIN IN SOLDER TAIL AREA OVER
1.27µm/50µin MIN. NICKEL OVERALL.
3 - 0.76µm/30µin GOLD IN CONTACT AREA AND
1.88µm/75µin MIN. MATTE TIN IN SOLDER TAIL AREA OVER
1.27µm/50µin MIN. NICKEL OVERALL.
4 - 2.50µm/100µin MIN. MATTE TIN OVER 1.25µm/50µin MIN. NICKEL OVERALL.

THIS DRAWING CONTAINS INFORMATION THAT IS PROPRIETARY TO MOLEX ELECTRONIC TECHNOLOGIES, LLC AND SHOULD NOT BE USED WITHOUT WRITTEN PERMISSION

DIMENSION UNITS	mm
SCALE	NTS
GENERAL TOLERANCES (UNLESS SPECIFIED)	MM / INCH
4 PLACES	± / ±
3 PLACES	± / ±
2 PLACES	± 0.2 / ±
1 PLACE	± / ±
0 PLACES	± / ±
ANGULAR TOL	± 3.0 °
DRAFT WHERE APPLICABLE MUST REMAIN WITHIN DIMENSIONS	

CURRENT REV DESC: REMOVED OBSOLETED PART NUMBERS AS PER PCN#512581.

EC NO: 761863
DRWN: SUAIFR 2023/08/14
CHK'D: GGA 2023/09/11
APPR: GGA 2023/09/11

INITIAL REVISION:
DRWN: GMENARLY 2015/04/15
APPR: KHLIM 2015/06/29

THIRD ANGLE PROJECTION | DRAWING: A3-SIZE | SERIES: 87831

molex

MILLIGRID
2MM PITCH, THROUGH HOLE VERTICAL SHROUDED HEADER

PRODUCT CUSTOMER DRAWING

DOCUMENT NUMBER	DOC TYPE	DOC PART	REVISION
SD-87831-0001	PSD	001	A24

MATERIAL NUMBER	CUSTOMER	SHEET NUMBER
SEE TABLE	GENERAL MARKET	5 OF 14

DOCUMENT STATUS	P1	RELEASE DATE	2023/09/11 04:36:51

FORMAT: Mel-lega-master-tb-prod-A3
REVISION: E1
DATE: 2021/05/01

8 TO 12 CIRCUITS

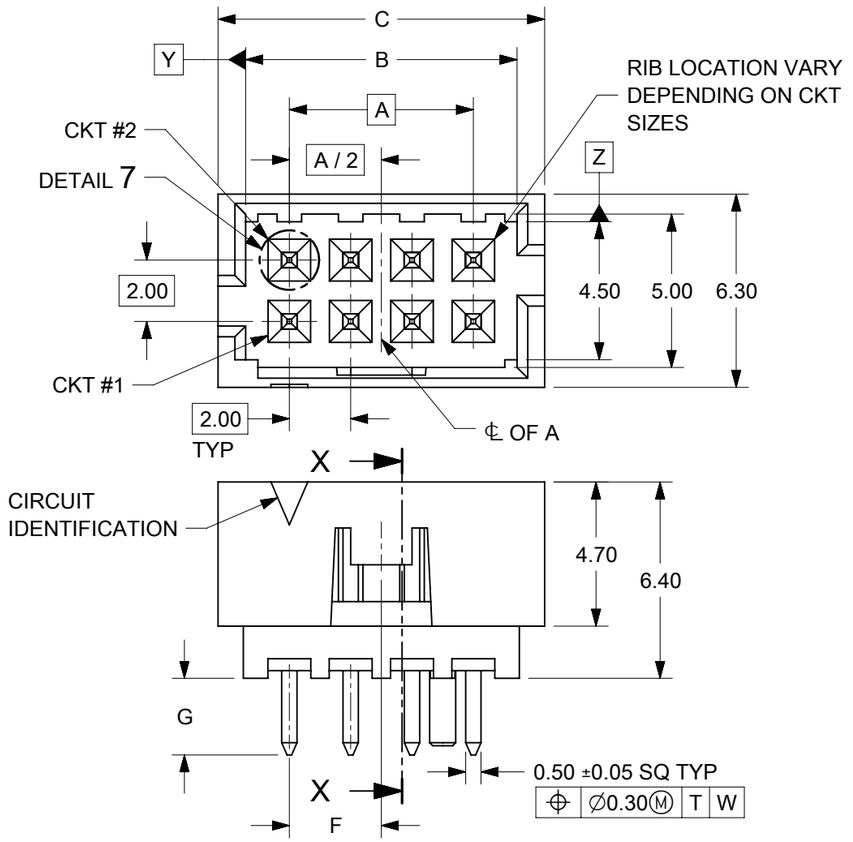

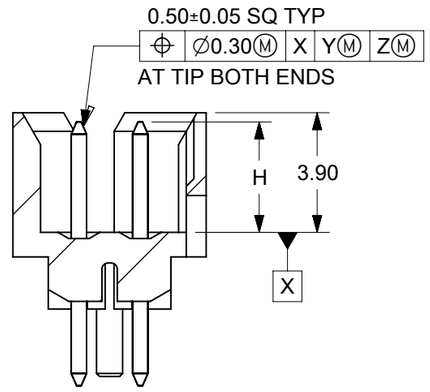

SECTION X-X

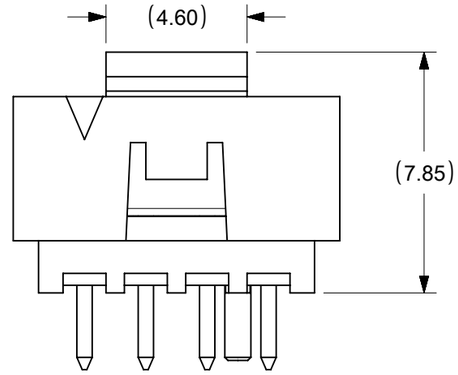

VIEW FOR HEADER WITH CAP

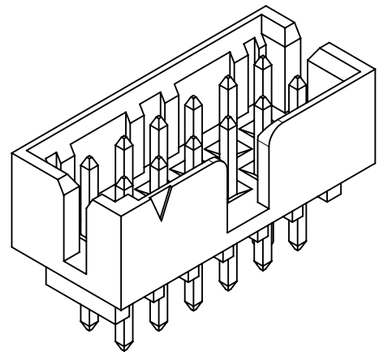

VIEW FOR HEADER WITH CENTER
POLARIZATION AND DUAL SIDE SLOTS

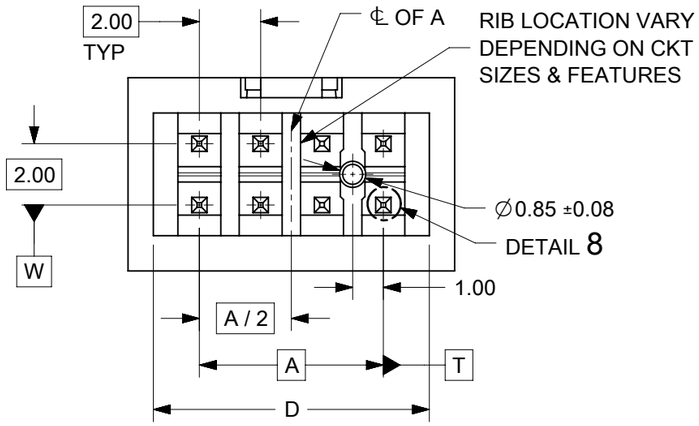

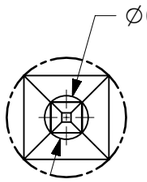

DETAIL 7

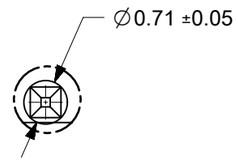

DETAIL 8

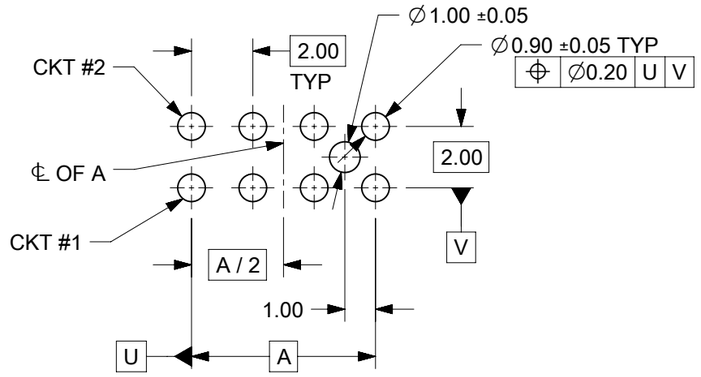

RECOMMENDED PCB LAYOUT

NOTES:
1. MATERIALS:
   HOUSING: 30% GF, NYLON, UL94V-0, COLOR: BLACK
   PIN: 0.50mm SQ PHOSPHOR BRONZE
2. FINISHES: REFER TO PLATING OPTIONS
3. PRODUCT SPECIFICATION: PS-87831-027
4. PACKAGING SPECIFICATION: SEE PACKAGING SPECS TABLE ON SHEET 1
5. MATES WITH: A. MOLEX CRIMP RECEPTACLE HOUSING: 51110 SERIES
   AND CRIMP TERMINAL: 50394 SERIES
   B. MOLEX 2mm MILLIGRID DUAL ROW IDT: 87568 SERIES
   C. MOLEX 2mm MILLIGRID DUAL ROW RECEPTACLE:
   79107 (GOLD PLATED), 78787 (TIN PLATED)

DOCUMENT STATUS	P1	RELEASE DATE	2023/09/11 04:36:51

THIS DRAWING CONTAINS INFORMATION THAT IS PROPRIETARY TO MOLEX ELECTRONIC TECHNOLOGIES, LLC AND SHOULD NOT BE USED WITHOUT WRITTEN PERMISSION

DIMENSION UNITS	SCALE
mm	NTS

GENERAL TOLERANCES (UNLESS SPECIFIED)

	MM	INCH
4 PLACES	±	±
3 PLACES	±	±
2 PLACES	± 0.2	±
1 PLACE	±	±
0 PLACES	±	±
ANGULAR TOL	± 3.0 °	

DRAFT WHERE APPLICABLE MUST REMAIN WITHIN DIMENSIONS

CURRENT REV DESC: REMOVED OBSOLETED PART NUMBERS AS PER PCN#512581.

EC NO: 761863
DRWN: SUAIFR 2023/08/14
CHK'D: GGA 2023/09/11
APPR: GGA 2023/09/11

INITIAL REVISION:
DRWN: GMENARLY 2015/04/15
APPR: KHLIM 2015/06/29

molex

MILLIGRID
2MM PITCH, THROUGH HOLE VERTICAL SHROUDED HEADER

PRODUCT CUSTOMER DRAWING

DOCUMENT NUMBER	DOC TYPE	DOC PART	REVISION
SD-87831-0001	PSD	001	A24

THIRD ANGLE PROJECTION	DRAWING	SERIES	MATERIAL NUMBER	CUSTOMER	SHEET NUMBER
	A3-SIZE	87831	SEE TABLE	GENERAL MARKET	6 OF 14

FORMAT: Mel-lega-master-lb-prod-A3
REVISION: E1
DATE: 2021/05/01

8 CIRCUITS

CKT SIZE	ASSY P/N WITHOUT CAP IN TUBE	ASSY P/N WITH CAP IN TUBE	ASSY P/N WITH CAP IN T&R	PLATING OPTIONS	FRICTION LOCKS		SIDE SLOTS		CENTER POLARIZATION	PEG	DIMENSION							
					DUAL	CENTER	DUAL	SINGLE			A	B	C	D	E	F	G	H
8	87831-0819	N.A	N.A	1	N.A	N.A	YES	N.A	YES	N.A	6.00	8.85	10.65	9.00	N.A	N.A	2.50	3.60±0.20
	87831-0820	N.A	N.A	2														
	87831-0821	N.A	N.A	3														
	87831-0836	N.A	N.A	4														
	87831-0828	N.A	N.A	2	N.A	N.A	YES	N.A	YES	YES						N.A	2.50	
	87831-0829	N.A	N.A	3														
	87831-0841	N.A	87831-5551	2	N.A	YES	YES	N.A	N.A	N.A						3.00	2.50	
	87831-0842	N.A	N.A	3														
	87831-5841	N.A	N.A	2	N.A	YES	YES	N.A	N.A	YES								
	87831-5441	N.A	N.A	2	N.A	YES	YES	N.A	N.A	N.A							3.50	
	87831-5442	N.A	N.A	3														
	87831-5541	N.A	N.A	2	N.A	YES	YES	N.A	N.A	N.A							2.80	
	87831-5542	N.A	N.A	3														
	87831-5741	N.A	N.A	2	N.A	YES	YES	N.A	N.A	N.A							4.70	
	87831-0832	N.A	N.A	2	N.A	YES	YES	N.A	N.A	YES							2.50	$3.60^{+0.15}_{-0.10}$
	87831-0843	N.A	N.A	2	N.A	YES	N.A	YES	N.A	N.A							2.50	
	87831-0844	N.A	N.A	3														
	87831-0845	N.A	N.A	2	N.A	YES	N.A	YES	N.A	YES							2.50	
	87831-0846	N.A	N.A	3														

PLATING OPTIONS:

1 - 0.05-0.13µm/2-5µin GOLD IN CONTACT AREA AND
1.88µm/75µin MIN. MATTE TIN IN SOLDER TAIL AREA OVER
1.27µm/50µin MIN. NICKEL OVERALL.
2 - 0.38µm/15µin GOLD IN CONTACT AREA AND
1.88µm/75µin MIN. MATTE TIN IN SOLDER TAIL AREA OVER
1.27µm/50µin MIN. NICKEL OVERALL.
3 - 0.76µm/30µin GOLD IN CONTACT AREA AND
1.88µm/75µin MIN. MATTE TIN IN SOLDER TAIL AREA OVER
1.27µm/50µin MIN. NICKEL OVERALL.
4 - 2.50µm/100µin MIN. MATTE TIN OVER 1.25µm/50µin MIN. NICKEL OVERALL.

THIS DRAWING CONTAINS INFORMATION THAT IS PROPRIETARY TO MOLEX ELECTRONIC TECHNOLOGIES, LLC AND SHOULD NOT BE USED WITHOUT WRITTEN PERMISSION

DIMENSION UNITS	mm
SCALE	NTS
GENERAL TOLERANCES (UNLESS SPECIFIED)	MM / INCH
4 PLACES	± / ±
3 PLACES	± / ±
2 PLACES	± 0.2 / ±
1 PLACE	± / ±
0 PLACES	± / ±
ANGULAR TOL	± 3.0 °
DRAFT WHERE APPLICABLE MUST REMAIN WITHIN DIMENSIONS	

CURRENT REV DESC: REMOVED OBSOLETED PART NUMBERS AS PER PCN#512581.

EC NO: 761863
DRWN: SUAIFR 2023/08/14
CHK'D: GGA 2023/09/11
APPR: GGA 2023/09/11

INITIAL REVISION:
DRWN: GMENARLY 2015/04/15
APPR: KHLIM 2015/06/29

THIRD ANGLE PROJECTION | DRAWING: A3-SIZE | SERIES: 87831

molex

MILLIGRID
2MM PITCH, THROUGH HOLE VERTICAL SHROUDED HEADER

PRODUCT CUSTOMER DRAWING

DOCUMENT NUMBER	DOC TYPE	DOC PART	REVISION
SD-87831-0001	PSD	001	A24

MATERIAL NUMBER	CUSTOMER	SHEET NUMBER
SEE TABLE	GENERAL MARKET	7 OF 14

DOCUMENT STATUS	P1	RELEASE DATE	2023/09/11 04:36:51

FORMAT: Mel-lega-master-tb-prod-A3
REVISION: E1
DATE: 2021/05/01

10 TO 12 CIRCUITS

CKT SIZE	ASSY P/N WITHOUT CAP IN TUBE	ASSY P/N WITH CAP IN TUBE	ASSY P/N WITH CAP IN T&R	ASSY P/N WITHOUT CAP IN T&R	PLATING OPTIONS	FRICTION LOCKS		SIDE SLOTS		CENTER POLARIZATION	PEG	DIMENSION							
						DUAL	CENTER	DUAL	SINGLE			A	B	C	D	E	F	G	H
10	87831-1019	N.A	N.A		1	N.A	N.A	YES	N.A	YES	N.A	8.00	10.85	12.65	11.00	N.A	N.A	2.50	3.60±0.20
	87831-1020	N.A	87831-1070		2														
	87831-1021	N.A	87831-5562		3														
	87831-1036	N.A	N.A		4														
	87831-1010	N.A	87831-5561		2	N.A	N.A	YES	N.A	YES	N.A							3.50	
	87831-1011	N.A	N.A		3														
	87831-1028	N.A	N.A		2	N.A	N.A	YES	N.A	YES	YES							2.50	
	87831-1029	N.A	87831-5557		3														
	87831-1035	N.A	N.A		3	N.A	N.A	YES	N.A	YES	YES							3.50	
	87831-1041	N.A	N.A		2	N.A	YES	YES	N.A	N.A	N.A						4.00	2.50	
	87831-1042	N.A	87831-5553		3														
	87831-1032	N.A	N.A		2	N.A	YES	YES	N.A	N.A	YES							2.50	3.60 +0.15 -0.10
	87831-1043	N.A	N.A		2	N.A	YES	N.A	YES	N.A	N.A							2.50	
	87831-1044	N.A	N.A		3														
	87831-1045	N.A	N.A		2	N.A	YES	N.A	YES	N.A	YES							2.50	
	87831-1046	N.A	N.A		3														
12	87831-1219	N.A	N.A		1	N.A	N.A	YES	N.A	YES	N.A	10.00	12.85	14.65	13.00	N.A	N.A	2.50	3.60±0.20
	87831-1220	N.A	87831-5556		2														
	87831-1221	N.A	N.A		3														
	87831-1236	N.A	N.A		4														
	87831-1228	N.A	N.A		2	N.A	N.A	YES	N.A	YES	YES							2.50	
	87831-1229	N.A	87831-5558		3														
	87831-1258	N.A	87831-5567		2													3.50	
	87831-1241	N.A	N.A		2	N.A	YES	YES	N.A	N.A	N.A						5.00	2.50	
	87831-1242	N.A	N.A		3														
	87831-1255	87831-1256	N.A		2	N.A	YES	YES	N.A	N.A	N.A							3.50	
	87831-1232	N.A	N.A		2	N.A	YES	YES	N.A	N.A	YES							2.50	3.60 +0.15 -0.10
	87831-1243	N.A	N.A		2	N.A	YES	N.A	YES	N.A	N.A							2.50	
	87831-1244	N.A	N.A		3														
	87831-1245	N.A	N.A		2	N.A	YES	N.A	YES	N.A	YES							2.50	
	87831-1246	N.A	N.A		3														

PLATING OPTIONS:

1 - 0.05-0.13µm/2-5µin GOLD IN CONTACT AREA AND
1.88µm/75µin MIN. MATTE TIN IN SOLDER TAIL AREA OVER
1.27µm/50µin MIN. NICKEL OVERALL.
2 - 0.38µm/15µin GOLD IN CONTACT AREA AND
1.88µm/75µin MIN. MATTE TIN IN SOLDER TAIL AREA OVER
1.27µm/50µin MIN. NICKEL OVERALL.
3 - 0.76µm/30µin GOLD IN CONTACT AREA AND
1.88µm/75µin MIN. MATTE TIN IN SOLDER TAIL AREA OVER
1.27µm/50µin MIN. NICKEL OVERALL.
4 - 2.50µm/100µin MIN. MATTE TIN OVER 1.25µm/50µin MIN. NICKEL OVERALL.

THIS DRAWING CONTAINS INFORMATION THAT IS PROPRIETARY TO MOLEX ELECTRONIC TECHNOLOGIES, LLC AND SHOULD NOT BE USED WITHOUT WRITTEN PERMISSION

DIMENSION UNITS	SCALE
mm	NTS

GENERAL TOLERANCES (UNLESS SPECIFIED)

	MM	INCH
4 PLACES	±	±
3 PLACES	±	±
2 PLACES	± 0.2	±
1 PLACE	±	±
0 PLACES	±	±
ANGULAR TOL	± 3.0 °	

DRAFT WHERE APPLICABLE MUST REMAIN WITHIN DIMENSIONS

CURRENT REV DESC: REMOVED OBSOLETED PART NUMBERS AS PER PCN#512581.

EC NO: 761863
DRWN: SUAIFR 2023/08/14
CHK'D: GGA 2023/09/11
APPR: GGA 2023/09/11

INITIAL REVISION:
DRWN: GMENARLY 2015/04/15
APPR: KHLIM 2015/06/29

THIRD ANGLE PROJECTION | DRAWING: A3-SIZE | SERIES: 87831

molex

MILLIGRID
2MM PITCH, THROUGH HOLE VERTICAL SHROUDED HEADER

PRODUCT CUSTOMER DRAWING

DOCUMENT NUMBER	DOC TYPE	DOC PART	REVISION
SD-87831-0001	PSD	001	A24

MATERIAL NUMBER	CUSTOMER	SHEET NUMBER
SEE TABLE	GENERAL MARKET	8 OF 14

DOCUMENT STATUS	P1	RELEASE DATE	2023/09/11 04:36:51

FORMAT: Met-lega-master-tb-prod-A3
REVISION: E1
DATE: 2021/05/01

14 TO 50 CIRCUITS

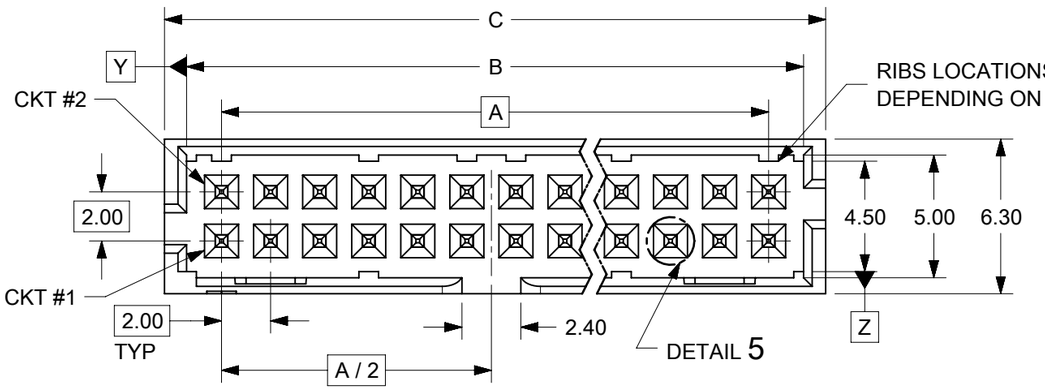

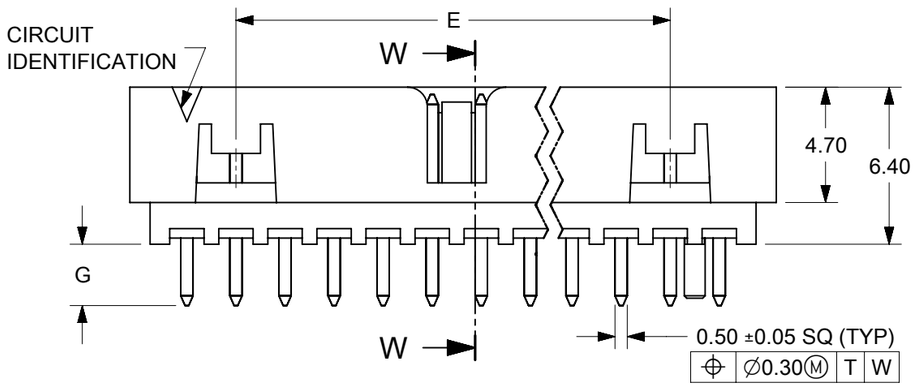

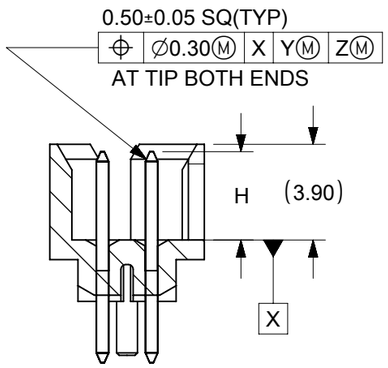

SECTION W-W

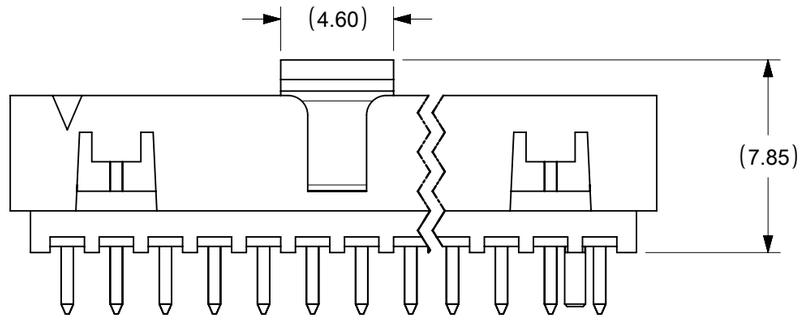

VIEW FOR HEADER WITH CAP

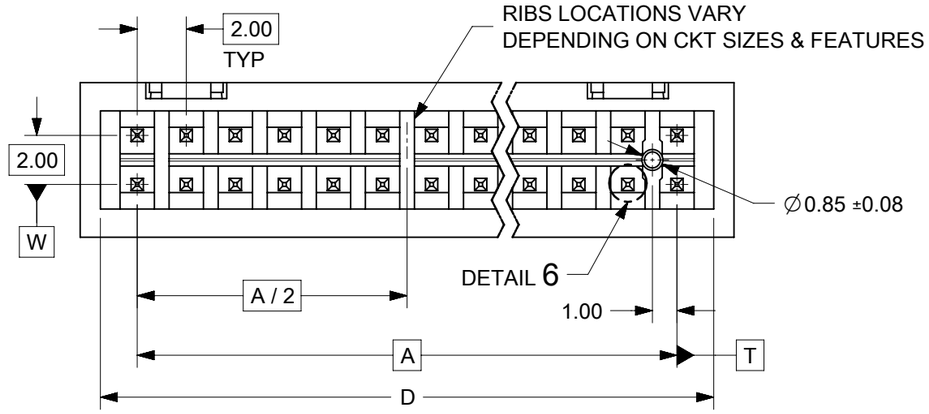

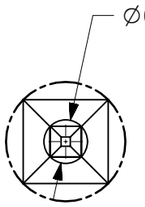

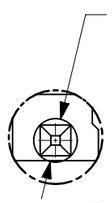

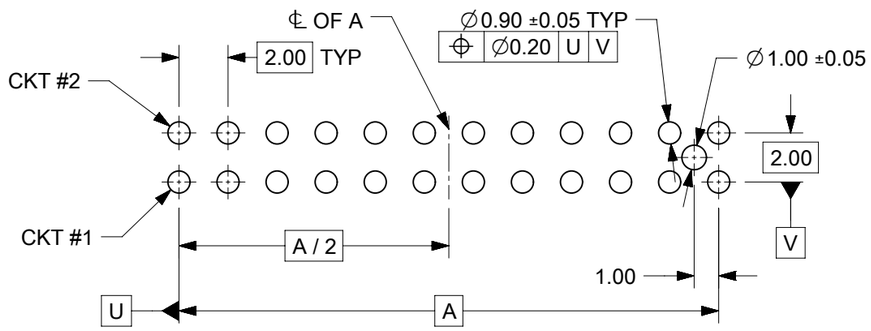

RECOMMENDED PCB LAYOUT

NOTES:
1. MATERIALS:
   HOUSING: 30% GF, NYLON, UL94V-0, COLOR: BLACK
   PIN: 0.50mm SQ PHOSPHOR BRONZE
2. FINISHES: REFER TO PLATING OPTIONS
3. PRODUCT SPECIFICATION: PS-87831-027
4. PACKAGING SPECIFICATION: SEE PACKAGING SPECS TABLE ON SHEET 1
5. MATES WITH: A. MOLEX CRIMP RECEPTACLE HOUSING: 51110 SERIES
   AND CRIMP TERMINAL: 50394 SERIES
   B. MOLEX 2mm MILLIGRID DUAL ROW IDT: 87568 SERIES
   C. MOLEX 2mm MILLIGRID DUAL ROW RECEPTACLE:
   79107 (GOLD PLATED), 78787 (TIN PLATED)

DOCUMENT STATUS	P1	RELEASE DATE	2023/09/11 04:36:51

THIS DRAWING CONTAINS INFORMATION THAT IS PROPRIETARY TO MOLEX ELECTRONIC TECHNOLOGIES, LLC AND SHOULD NOT BE USED WITHOUT WRITTEN PERMISSION

DIMENSION UNITS	SCALE
mm	NTS

GENERAL TOLERANCES (UNLESS SPECIFIED)

	MM	INCH
4 PLACES	±	±
3 PLACES	±	±
2 PLACES	± 0.2	±
1 PLACE	±	±
0 PLACES	±	±
ANGULAR TOL	± 3.0 °	

DRAFT WHERE APPLICABLE MUST REMAIN WITHIN DIMENSIONS

CURRENT REV DESC: REMOVED OBSOLETED PART NUMBERS AS PER PCN#512581.

EC NO: 761863
DRWN: SUAIFR 2023/08/14
CHK'D: GGA 2023/09/11
APPR: GGA 2023/09/11

INITIAL REVISION:
DRWN: GMENARLY 2015/04/15
APPR: KHLIM 2015/06/29

molex

MILLIGRID
2MM PITCH, THROUGH HOLE VERTICAL SHROUDED HEADER

PRODUCT CUSTOMER DRAWING

DOCUMENT NUMBER	DOC TYPE	DOC PART	REVISION
SD-87831-0001	PSD	001	A24

THIRD ANGLE PROJECTION	DRAWING	SERIES	MATERIAL NUMBER	CUSTOMER	SHEET NUMBER
	A3-SIZE	87831	SEE TABLE	GENERAL MARKET	9 OF 14

FORMAT: Mel-lega-master-lb-prod-A3
REVISION: E1
DATE: 2021/05/01

14 TO 20 CIRCUITS

CKT SIZE	ASSY P/N WITHOUT CAP IN TUBE	ASSY P/N WITH CAP IN TUBE	ASSY P/N WITH CAP IN T&R	ASSY P/N WITHOUT CAP IN T&R	PLATING OPTIONS	FRICTION LOCKS		SIDE SLOTS		CENTER POLARIZATION	PEG	DIMENSION							
						DUAL	CENTER	DUAL	SINGLE			A	B	C	D	E	F	G	H
14	87831-1419	N.A	N.A	N.A	1	YES	N.A	YES	N.A	YES	N.A	12.00	14.85	16.65	15.00	8.00	N.A	2.50	3.60±0.20
	87831-1420	87831-1430	87831-5554	N.A	2														
	87831-1421	N.A	87831-5560	N.A	3														
	87831-1436	N.A	N.A	N.A	4														
	87831-1428	N.A	87831-5564	N.A	2	YES	N.A	YES	N.A	YES	YES							2.50	
	87831-1429	N.A	87831-5563	N.A	3														
	87831-1435	N.A	N.A	N.A	3	YES	N.A	YES	N.A	YES	YES							3.50	
	87831-1410	N.A	N.A	N.A	2	YES	N.A	YES	N.A	YES	N.A							3.50	
	87831-1411	N.A	N.A	N.A	3														
16	87831-1619	N.A	N.A	N.A	1	YES	N.A	YES	N.A	YES	N.A	14.00	16.85	18.65	17.00	10.00	N.A	2.50	3.60±0.20
	87831-1620	N.A	N.A	N.A	2														
	87831-1621	N.A	N.A	N.A	3														
	87831-1636	N.A	N.A	N.A	4														
	87831-1628	N.A	N.A	N.A	2	YES	N.A	YES	N.A	YES	YES							2.50	
	87831-1629	N.A	87831-5559	N.A	3														
	87831-1635	N.A	N.A	N.A	3	YES	N.A	YES	N.A	YES	YES							3.50	
18	87831-1819	N.A	N.A	N.A	1	YES	N.A	YES	N.A	YES	N.A	16.00	18.85	20.65	19.00	12.00	N.A	2.50	3.60±0.20
	87831-1820	N.A	87831-5566	87831-1830	2														
	87831-1821	N.A	N.A	N.A	3														
	87831-1836	N.A	N.A	N.A	4														
	87831-1828	N.A	N.A	N.A	2	YES	N.A	YES	N.A	YES	YES							2.50	
	87831-1829	N.A	N.A	N.A	3														
20	87831-2019	N.A	N.A	N.A	1	YES	N.A	YES	N.A	YES	N.A	18.00	20.85	22.65	21.00	14.00	N.A	2.50	3.60±0.20
	87831-2020	N.A	N.A	87831-2050	2														
	87831-2021	N.A	N.A	N.A	3														
	87831-2036	N.A	N.A	N.A	4														
	87831-2028	N.A	N.A	N.A	2	YES	N.A	YES	N.A	YES	YES							2.50	
	87831-2029	N.A	N.A	N.A	3														
	87831-2035	N.A	N.A	N.A	3	YES	N.A	YES	N.A	YES	YES							3.50	
	87831-2010	N.A	N.A	N.A	2	YES	N.A	YES	N.A	YES	N.A							3.50	
	87831-2011	N.A	87831-2041	87831-2051	3														

PLATING OPTIONS:

1 - 0.05-0.13µm/2-5µin GOLD IN CONTACT AREA AND
1.88µm/75µin MIN. MATTE TIN IN SOLDER TAIL AREA OVER
1.27µm/50µin MIN. NICKEL OVERALL.
2 - 0.38µm/15µin GOLD IN CONTACT AREA AND
1.88µm/75µin MIN. MATTE TIN IN SOLDER TAIL AREA OVER
1.27µm/50µin MIN. NICKEL OVERALL.
3 - 0.76µm/30µin GOLD IN CONTACT AREA AND
1.88µm/75µin MIN. MATTE TIN IN SOLDER TAIL AREA OVER
1.27µm/50µin MIN. NICKEL OVERALL.
4 - 2.50µm/100µin MIN. MATTE TIN OVER 1.25µm/50µin MIN. NICKEL OVERALL.

THIS DRAWING CONTAINS INFORMATION THAT IS PROPRIETARY TO MOLEX ELECTRONIC TECHNOLOGIES, LLC AND SHOULD NOT BE USED WITHOUT WRITTEN PERMISSION

DIMENSION UNITS: mm | SCALE: NTS

GENERAL TOLERANCES (UNLESS SPECIFIED)

	MM	INCH
4 PLACES	±	±
3 PLACES	±	±
2 PLACES	± 0.2	±
1 PLACE	±	±
0 PLACES	±	±
ANGULAR TOL	± 3.0 °	

DRAFT WHERE APPLICABLE MUST REMAIN WITHIN DIMENSIONS

CURRENT REV DESC: REMOVED OBSOLETED PART NUMBERS AS PER PCN#512581.

EC NO: 761863
DRWN: SUAIFR 2023/08/14
CHK'D: GGA 2023/09/11
APPR: GGA 2023/09/11

INITIAL REVISION:
DRWN: GMENARLY 2015/04/15
APPR: KHLIM 2015/06/29

THIRD ANGLE PROJECTION | DRAWING: A3-SIZE | SERIES: 87831

molex

MILLIGRID
2MM PITCH, THROUGH HOLE VERTICAL SHROUDED HEADER

PRODUCT CUSTOMER DRAWING

DOCUMENT NUMBER	DOC TYPE	DOC PART	REVISION
SD-87831-0001	PSD	001	A24

MATERIAL NUMBER	CUSTOMER	SHEET NUMBER
SEE TABLE	GENERAL MARKET	10 OF 14

DOCUMENT STATUS	P1	RELEASE DATE	2023/09/11 04:36:51

FORMAT: Mel-lega-master-tb-prod-A3
REVISION: E1
DATE: 2021/05/01

22 TO 30 CIRCUITS

CKT SIZE	ASSY P/N WITHOUT CAP IN TUBE	ASSY P/N WITH CAP IN TUBE	ASSY P/N WITH CAP IN T&R	ASSY P/N WITHOUT CAP IN T&R	PLATING OPTIONS	FRICTION LOCKS		SIDE SLOTS		CENTER POLARIZATION	PEG	DIMENSION							
						DUAL	CENTER	DUAL	SINGLE			A	B	C	D	E	F	G	H
22	87831-2219	N.A	N.A	N.A	1	YES	N.A	YES	N.A	YES	N.A	20.00	22.85	24.65	23.00	16.00	N.A	2.50	3.60±0.20
	87831-2220	N.A	N.A	N.A	2														
	87831-2221	N.A	N.A	N.A	3														
	87831-2236	N.A	N.A	N.A	4														
	87831-2228	N.A	N.A	N.A	2	YES	N.A	YES	N.A	YES	YES							2.50	
	87831-2229	N.A	N.A	N.A	3														
24	87831-2419	N.A	N.A	N.A	1	YES	N.A	YES	N.A	YES	N.A	22.00	24.85	26.65	25.00	18.00	N.A	2.50	3.60±0.20
	87831-2420	N.A	N.A	87831-7420	2														
	87831-2421	N.A	N.A	N.A	3														
	87831-2436	N.A	N.A	N.A	4														
	87831-2428	N.A	N.A	N.A	2	YES	N.A	YES	N.A	YES	YES							2.50	
	87831-2429	N.A	N.A	N.A	3														
	87831-2435	N.A	N.A	N.A	3													3.50	
	87831-2445	N.A	N.A	N.A	3													2.80	
	87831-2410	N.A	N.A	N.A	2	YES	N.A	YES	N.A	YES	N.A							3.50	
26	87831-2619	N.A	N.A	N.A	1	YES	N.A	YES	N.A	YES	N.A	24.00	26.85	28.65	27.00	20.00	N.A	2.50	3.60±0.20
	87831-2620	87831-2630	87831-5555	N.A	2														
	87831-2621	N.A	N.A	N.A	3														
	87831-2636	N.A	N.A	N.A	4														
	87831-2628	N.A	N.A	N.A	2	YES	N.A	YES	N.A	YES	YES							2.50	
	87831-2629	N.A	N.A	N.A	3														
	87831-2610	N.A	N.A	N.A	2	YES	N.A	YES	N.A	YES	N.A							3.50	
28	87831-2819	N.A	N.A	N.A	1	YES	N.A	YES	N.A	YES	N.A	26.00	28.85	30.65	29.00	22.00	N.A	2.50	3.60±0.20
	87831-2820	N.A	N.A	N.A	2														
	87831-2821	N.A	N.A	N.A	3														
	87831-2836	N.A	N.A	N.A	4														
	87831-2828	N.A	N.A	N.A	2	YES	N.A	YES	N.A	YES	YES							2.50	
	87831-2829	N.A	N.A	N.A	3														
30	87831-3019	N.A	N.A	N.A	1	YES	N.A	YES	N.A	YES	N.A	28.00	30.85	32.65	31.00	24.00	N.A	2.50	3.60±0.20
	87831-3020	N.A	N.A	N.A	2														
	87831-3021	N.A	N.A	N.A	3														
	87831-3036	N.A	N.A	N.A	4														
	87831-3028	N.A	N.A	N.A	2	YES	N.A	YES	N.A	YES	YES							2.50	
	87831-3029	N.A	N.A	N.A	3														
	87831-3035	N.A	N.A	N.A	3	YES	N.A	YES	N.A	YES	YES							3.50	
	87831-3037	N.A	N.A	N.A	3	YES	N.A	YES	N.A	YES	YES							1.60	
	87831-3010	87831-3030	87831-3050	N.A	2	YES	N.A	YES	N.A	YES	N.A							3.50	

PLATING OPTIONS:

1 - 0.05-0.13µm/2-5µin GOLD IN CONTACT AREA AND
1.88µm/75µin MIN. MATTE TIN IN SOLDER TAIL AREA OVER
1.27µm/50µin MIN. NICKEL OVERALL.
2 - 0.38µm/15µin GOLD IN CONTACT AREA AND
1.88µm/75µin MIN. MATTE TIN IN SOLDER TAIL AREA OVER
1.27µm/50µin MIN. NICKEL OVERALL.
3 - 0.76µm/30µin GOLD IN CONTACT AREA AND
1.88µm/75µin MIN. MATTE TIN IN SOLDER TAIL AREA OVER
1.27µm/50µin MIN. NICKEL OVERALL.
4 - 2.50µm/100µin MIN. MATTE TIN OVER 1.25µm/50µin MIN. NICKEL OVERALL.

THIS DRAWING CONTAINS INFORMATION THAT IS PROPRIETARY TO MOLEX ELECTRONIC TECHNOLOGIES, LLC AND SHOULD NOT BE USED WITHOUT WRITTEN PERMISSION

DIMENSION UNITS	SCALE
mm	NTS

GENERAL TOLERANCES (UNLESS SPECIFIED)

	MM	INCH
4 PLACES	±	±
3 PLACES	±	±
2 PLACES	± 0.2	±
1 PLACE	±	±
0 PLACES	±	±
ANGULAR TOL	± 3.0 °	

DRAFT WHERE APPLICABLE MUST REMAIN WITHIN DIMENSIONS

CURRENT REV DESC: REMOVED OBSOLETED PART NUMBERS AS PER PCN#512581.

EC NO: 761863
DRWN: SUAIFR 2023/08/14
CHK'D: GGA 2023/09/11
APPR: GGA 2023/09/11

INITIAL REVISION:
DRWN: GMENARLY 2015/04/15
APPR: KHLIM 2015/06/29

THIRD ANGLE PROJECTION | DRAWING: A3-SIZE | SERIES: 87831

molex

MILLIGRID
2MM PITCH, THROUGH HOLE VERTICAL SHROUDED HEADER

PRODUCT CUSTOMER DRAWING

DOCUMENT NUMBER	DOC TYPE	DOC PART	REVISION
SD-87831-0001	PSD	001	A24

MATERIAL NUMBER	CUSTOMER	SHEET NUMBER
SEE TABLE	GENERAL MARKET	11 OF 14

DOCUMENT STATUS	P1	RELEASE DATE	2023/09/11 04:36:51

FORMAT: Mel-lega-master-tb-prod-A3
REVISION: E1
DATE: 2021/05/01

32 TO 40 CIRCUITS

CKT SIZE	ASSY P/N WITHOUT CAP IN TUBE	ASSY P/N WITH CAP IN TUBE	ASSY P/N WITH CAP IN T&R	PLATING OPTIONS	FRICTION LOCKS		SIDE SLOTS		CENTER POLARIZATION	PEG	DIMENSION							
					DUAL	CENTER	DUAL	SINGLE			A	B	C	D	E	F	G	H
32	87831-3219	N.A	N.A	1	YES	N.A	YES	N.A	YES	N.A	30.00	32.85	34.65	33.00	26.00	N.A	2.50	3.60±0.20
	87831-3220	N.A	N.A	2														
	87831-3221	N.A	N.A	3														
	87831-3236	N.A	N.A	4														
	87831-3228	N.A	N.A	2	YES	N.A	YES	N.A	YES	YES							2.50	
	87831-3229	N.A	N.A	3														
34	87831-3419	N.A	N.A	1	YES	N.A	YES	N.A	YES	N.A	32.00	34.85	36.65	35.00	28.00	N.A	2.50	3.60±0.20
	87831-3420	N.A	N.A	2														
	87831-3421	N.A	N.A	3														
	87831-3436	N.A	N.A	4														
	87831-3428	N.A	N.A	2	YES	N.A	YES	N.A	YES	YES							2.50	
	87831-3429	N.A	N.A	3														
	87831-3435	N.A	N.A	3	YES	N.A	YES	N.A	YES	YES							3.50	
36	87831-3619	N.A	N.A	1	YES	N.A	YES	N.A	YES	N.A	34.00	36.85	38.65	37.00	30.00	N.A	2.50	3.60±0.20
	87831-3620	N.A	87831-5564	2														
	87831-3621	N.A	N.A	3														
	87831-3636	N.A	N.A	4														
	87831-3628	N.A	N.A	2	YES	N.A	YES	N.A	YES	YES							2.50	
	87831-3629	N.A	N.A	3														
38	87831-3819	N.A	N.A	1	YES	N.A	YES	N.A	YES	N.A	36.00	38.85	40.65	39.00	32.00	N.A	2.50	3.60±0.20
	87831-3820	N.A	N.A	2														
	87831-3821	N.A	N.A	3														
	87831-3836	N.A	N.A	4														
	87831-3828	N.A	N.A	2	YES	N.A	YES	N.A	YES	YES							2.50	
	87831-3829	N.A	N.A	3														
40	87831-4019	N.A	N.A	1	YES	N.A	YES	N.A	YES	N.A	38.00	40.85	42.65	41.00	34.00	N.A	2.50	3.60±0.20
	87831-4020	N.A	N.A	2														
	87831-4021	N.A	N.A	3														
	87831-4036	N.A	N.A	4														
	87831-4028	N.A	N.A	2	YES	N.A	YES	N.A	YES	YES							2.50	
	87831-4029	N.A	N.A	3														
	87831-4010	N.A	N.A	2	YES	N.A	YES	N.A	YES	N.A							3.50	

PLATING OPTIONS:

1 - 0.05-0.13µm/2-5µin GOLD IN CONTACT AREA AND
1.88µm/75µin MIN. MATTE TIN IN SOLDER TAIL AREA OVER
1.27µm/50µin MIN. NICKEL OVERALL.
2 - 0.38µm/15µin GOLD IN CONTACT AREA AND
1.88µm/75µin MIN. MATTE TIN IN SOLDER TAIL AREA OVER
1.27µm/50µin MIN. NICKEL OVERALL.
3 - 0.76µm/30µin GOLD IN CONTACT AREA AND
1.88µm/75µin MIN. MATTE TIN IN SOLDER TAIL AREA OVER
1.27µm/50µin MIN. NICKEL OVERALL.
4 - 2.50µm/100µin MIN. MATTE TIN OVER 1.25µm/50µin MIN. NICKEL OVERALL.

THIS DRAWING CONTAINS INFORMATION THAT IS PROPRIETARY TO MOLEX ELECTRONIC TECHNOLOGIES, LLC AND SHOULD NOT BE USED WITHOUT WRITTEN PERMISSION

DIMENSION UNITS	SCALE
mm	NTS

GENERAL TOLERANCES (UNLESS SPECIFIED)

	MM	INCH
4 PLACES	±	±
3 PLACES	±	±
2 PLACES	± 0.2	±
1 PLACE	±	±
0 PLACES	±	±
ANGULAR TOL	± 3.0 °	

DRAFT WHERE APPLICABLE MUST REMAIN WITHIN DIMENSIONS

CURRENT REV DESC: REMOVED OBSOLETED PART NUMBERS AS PER PCN#512581.

EC NO: 761863
DRWN: SUAIFR 2023/08/14
CHK'D: GGA 2023/09/11
APPR: GGA 2023/09/11

INITIAL REVISION:
DRWN: GMENARLY 2015/04/15
APPR: KHLIM 2015/06/29

THIRD ANGLE PROJECTION | DRAWING: A3-SIZE | SERIES: 87831

molex

MILLIGRID
2MM PITCH, THROUGH HOLE VERTICAL SHROUDED HEADER

PRODUCT CUSTOMER DRAWING

DOCUMENT NUMBER	DOC TYPE	DOC PART	REVISION
SD-87831-0001	PSD	001	A24

MATERIAL NUMBER	CUSTOMER	SHEET NUMBER
SEE TABLE	GENERAL MARKET	12 OF 14

DOCUMENT STATUS	P1	RELEASE DATE	2023/09/11 04:36:51

FORMAT: Met-lega-master-tb-prod-A3
REVISION: E1
DATE: 2021/05/01

42 TO 50 CIRCUITS

CKT SIZE	ASSY P/N WITHOUT CAP IN TUBE	ASSY P/N WITH CAP IN TUBE	ASSY P/N WITH CAP IN T&R	ASSY P/N WITHOUT CAP IN T&R	PLATING OPTIONS	FRICTION LOCKS		SIDE SLOTS		CENTER POLARIZATION	PEG	DIMENSION							
						DUAL	CENTER	DUAL	SINGLE			A	B	C	D	E	F	G	H
42	87831-4219	N.A	N.A	N.A	1	YES	N.A	YES	N.A	YES	N.A	40.00	42.85	44.65	43.00	36.00	N.A	2.50	3.60±0.20
	87831-4220	N.A	N.A	87831-4230	2														
	87831-4221	N.A	N.A	N.A	3														
	87831-4236	N.A	N.A	N.A	4														
	87831-4228	N.A	N.A	N.A	2	YES	N.A	YES	N.A	YES	YES							2.50	
	87831-4229	N.A	N.A	N.A	3														
44	87831-4419	N.A	N.A	N.A	1	YES	N.A	YES	N.A	YES	N.A	42.00	44.85	46.65	45.00	38.00	N.A	2.50	3.60±0.20
	87831-4420	N.A	N.A	N.A	2														
	87831-4421	N.A	N.A	N.A	3														
	87831-4436	N.A	N.A	N.A	4														
	87831-4428	N.A	N.A	N.A	2	YES	N.A	YES	N.A	YES	YES							2.50	
	87831-4429	N.A	N.A	N.A	3														
	87831-4435	N.A	N.A	N.A	3	YES	N.A	YES	N.A	YES	YES							3.50	
46	87831-4619	N.A	N.A	N.A	1	YES	N.A	YES	N.A	YES	N.A	44.00	46.85	48.65	47.00	40.00	N.A	2.50	3.60±0.20
	87831-4620	N.A	N.A	N.A	2														
	87831-4621	N.A	N.A	N.A	3														
	87831-4636	N.A	N.A	N.A	4														
	87831-4628	N.A	N.A	N.A	2	YES	N.A	YES	N.A	YES	YES							2.50	
	87831-4629	N.A	N.A	N.A	3														
48	87831-4819	N.A	N.A	N.A	1	YES	N.A	YES	N.A	YES	N.A	46.00	48.85	50.65	49.00	42.00	N.A	2.50	3.60±0.20
	87831-4820	N.A	N.A	N.A	2														
	87831-4821	N.A	N.A	N.A	3														
	87831-4836	N.A	N.A	N.A	4														
	87831-4828	N.A	N.A	N.A	2	YES	N.A	YES	N.A	YES	YES							2.50	
	87831-4829	N.A	N.A	N.A	3														
50	87831-5019	N.A	N.A	N.A	1	YES	N.A	YES	N.A	YES	N.A	48.00	50.85	52.65	51.00	44.00	N.A	2.50	3.60±0.20
	87831-5020	N.A	N.A	N.A	2														
	87831-5021	N.A	N.A	N.A	3														
	87831-5036	N.A	N.A	N.A	4														
	87831-5028	N.A	N.A	N.A	2	YES	N.A	YES	N.A	YES	YES							2.50	
	87831-5029	N.A	N.A	N.A	3														
	87831-5035	N.A	N.A	N.A	3	YES	N.A	YES	N.A	YES	YES							3.50	

PLATING OPTIONS:

1 - 0.05-0.13µm/2-5µin GOLD IN CONTACT AREA AND
1.88µm/75µin MIN. MATTE TIN IN SOLDER TAIL AREA OVER
1.27µm/50µin MIN. NICKEL OVERALL.
2 - 0.38µm/15µin GOLD IN CONTACT AREA AND
1.88µm/75µin MIN. MATTE TIN IN SOLDER TAIL AREA OVER
1.27µm/50µin MIN. NICKEL OVERALL.
3 - 0.76µm/30µin GOLD IN CONTACT AREA AND
1.88µm/75µin MIN. MATTE TIN IN SOLDER TAIL AREA OVER
1.27µm/50µin MIN. NICKEL OVERALL.
4 - 2.50µm/100µin MIN. MATTE TIN OVER 1.25µm/50µin MIN. NICKEL OVERALL.

THIS DRAWING CONTAINS INFORMATION THAT IS PROPRIETARY TO MOLEX ELECTRONIC TECHNOLOGIES, LLC AND SHOULD NOT BE USED WITHOUT WRITTEN PERMISSION

DIMENSION UNITS	SCALE
mm	NTS

GENERAL TOLERANCES (UNLESS SPECIFIED)

	MM	INCH
4 PLACES	±	±
3 PLACES	±	±
2 PLACES	± 0.2	±
1 PLACE	±	±
0 PLACES	±	±
ANGULAR TOL	± 3.0 °	

DRAFT WHERE APPLICABLE MUST REMAIN WITHIN DIMENSIONS

CURRENT REV DESC: REMOVED OBSOLETED PART NUMBERS AS PER PCN#512581.

EC NO: 761863
DRWN: SUAIFR 2023/08/14
CHK'D: GGA 2023/09/11
APPR: GGA 2023/09/11

INITIAL REVISION:
DRWN: GMENARLY 2015/04/15
APPR: KHLIM 2015/06/29

THIRD ANGLE PROJECTION | DRAWING: A3-SIZE | SERIES: 87831

molex

MILLIGRID
2MM PITCH, THROUGH HOLE VERTICAL SHROUDED HEADER

PRODUCT CUSTOMER DRAWING

DOCUMENT NUMBER	DOC TYPE	DOC PART	REVISION
SD-87831-0001	PSD	001	A24

MATERIAL NUMBER	CUSTOMER	SHEET NUMBER
SEE TABLE	GENERAL MARKET	13 OF 14

DOCUMENT STATUS	P1	RELEASE DATE	2023/09/11 04:36:51

FORMAT: Met-lega-master-lb-prod-A3
REVISION: E1
DATE: 2021/05/01

BOARD TO BOARD (BTB) DISTANCE

HEADER	MATES WITH (RECEPTACLE)	BTB DIST.	PICTORIAL VIEW
87831	79107	6.94	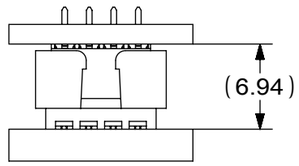
	78787	6.94	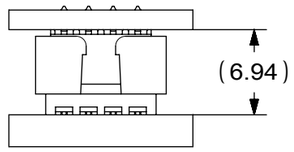
	79108	6.94	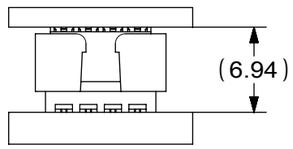
	79109	7.15	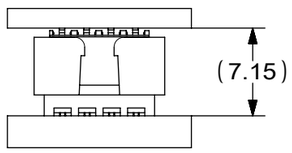
	78788	7.15	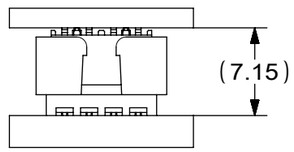

THIS DRAWING CONTAINS INFORMATION THAT IS PROPRIETARY TO MOLEX ELECTRONIC TECHNOLOGIES, LLC AND SHOULD NOT BE USED WITHOUT WRITTEN PERMISSION

DIMENSION UNITS	SCALE
mm	NTS

GENERAL TOLERANCES (UNLESS SPECIFIED)

	MM	INCH
4 PLACES	±	±
3 PLACES	±	±
2 PLACES	± 0.2	±
1 PLACE	±	±
0 PLACES	±	±
ANGULAR TOL	± 3.0 °	

DRAFT WHERE APPLICABLE MUST REMAIN WITHIN DIMENSIONS

CURRENT REV DESC: REMOVED OBSOLETED PART NUMBERS AS PER PCN#512581.

EC NO: 761863
DRWN: SUAIFR 2023/08/14
CHK'D: GGA 2023/09/11
APPR: GGA 2023/09/11

INITIAL REVISION:
DRWN: DRWN BY XXXX/XX/XX
APPR: APPR BY XXXX/XX/XX

THIRD ANGLE PROJECTION | DRAWING: A3-SIZE | SERIES: 87831

molex

MILLIGRID
2MM PITCH, THROUGH HOLE VERTICAL SHROUDED HEADER

PRODUCT CUSTOMER DRAWING

DOCUMENT NUMBER	DOC TYPE	DOC PART	REVISION
SD-87831-0001	PSD	001	A24

MATERIAL NUMBER	CUSTOMER	SHEET NUMBER
	GENERAL MARKET	14 OF 14

DOCUMENT STATUS	P1	RELEASE DATE	2023/09/11 04:36:51

FORMAT: Mel-lega-master-tb-prod-A3
REVISION: E1
DATE: 2021/05/01