NCV7680-NCV3136EVB

NCV7680-NCV3163 Evaluation Board User's Manual

ON Semiconductor®

http://onsemi.com

EVAL BOARD USER'S MANUAL

Description

The NCV7680 is an octal LED driver designed for automotive LED rear combination lamps. External programmability of the NCV7680 allows the user to set the tail current and stop currents using a single resistor for each function. An optional external FET is used to help distribute power for high power systems.

The NCV7680−NCV3163 Evaluation Board includes both an NCV7680 (octal driver) and NCV3163 (Boost Regulator). The NCV3163 allows for an increased number of LEDs per NCV7680 output by boosting the LED string anode voltage. The DIAG pin is brought out for reporting of open circuit conditions.

The LED's mounted on the evaluation board are jumpered giving flexibility for evaluating customer defined loads.

Part Features

- Constant Current Outputs for LED String Drive
- Open LED String Diagnostic with Open-Drain Output
- Low Dropout Operation for Pre-Regulator Applications
- External Modulation Capable
- On-chip 1 kHz Tail PWM Dimming
- Single Resistor for Stop Current Set Point
- Single Resistor for Tail Dimming Set Point
- Overvoltage Set Back Power Limitation
- AEC Q100 Qualified
- 16 Lead SOW Exposed Pad
- These are Pb-Free Devices

Board Features

- STOP Input Switch − Controls power to the circuit
- DIAG Output − Open Circuits are Reported
- LED Isolation − On-board LEDs can be Removed with Jumpers for Alternative LED Evaluation
- STOP Programming Current − Programming Resistor can be Adjusted Externally by Jumper Removal
- External PWM Input
- Adjustable Boost Circuit with Internal Switch − Set for 28 V on the NCV7680−NCV3163EVB Evaluation Board
- These Devices are Pb-Free and are RoHS Compliant

NOTE: For 100% Duty Cycle operation, connect the PWM Input post to the VP post. The default setup (with the 2 posts floating) yields 0% Duty Cycle.

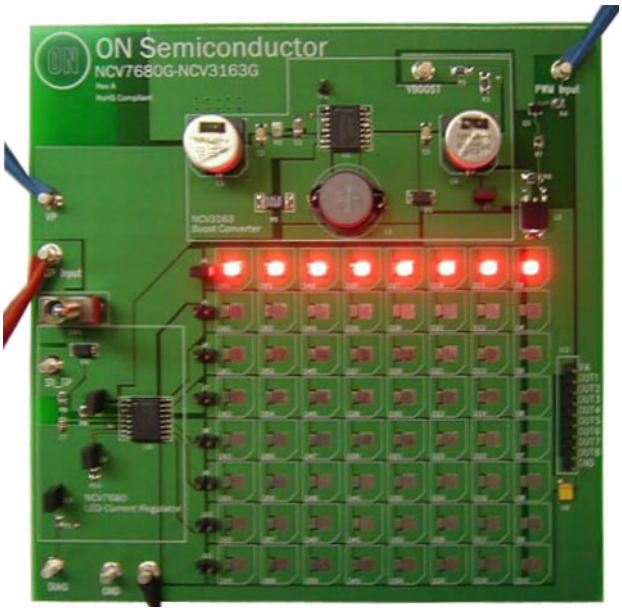

Figure 1. NCV7680−NCV3163EVB Photo

© Semiconductor Components Industries, LLC, 2014

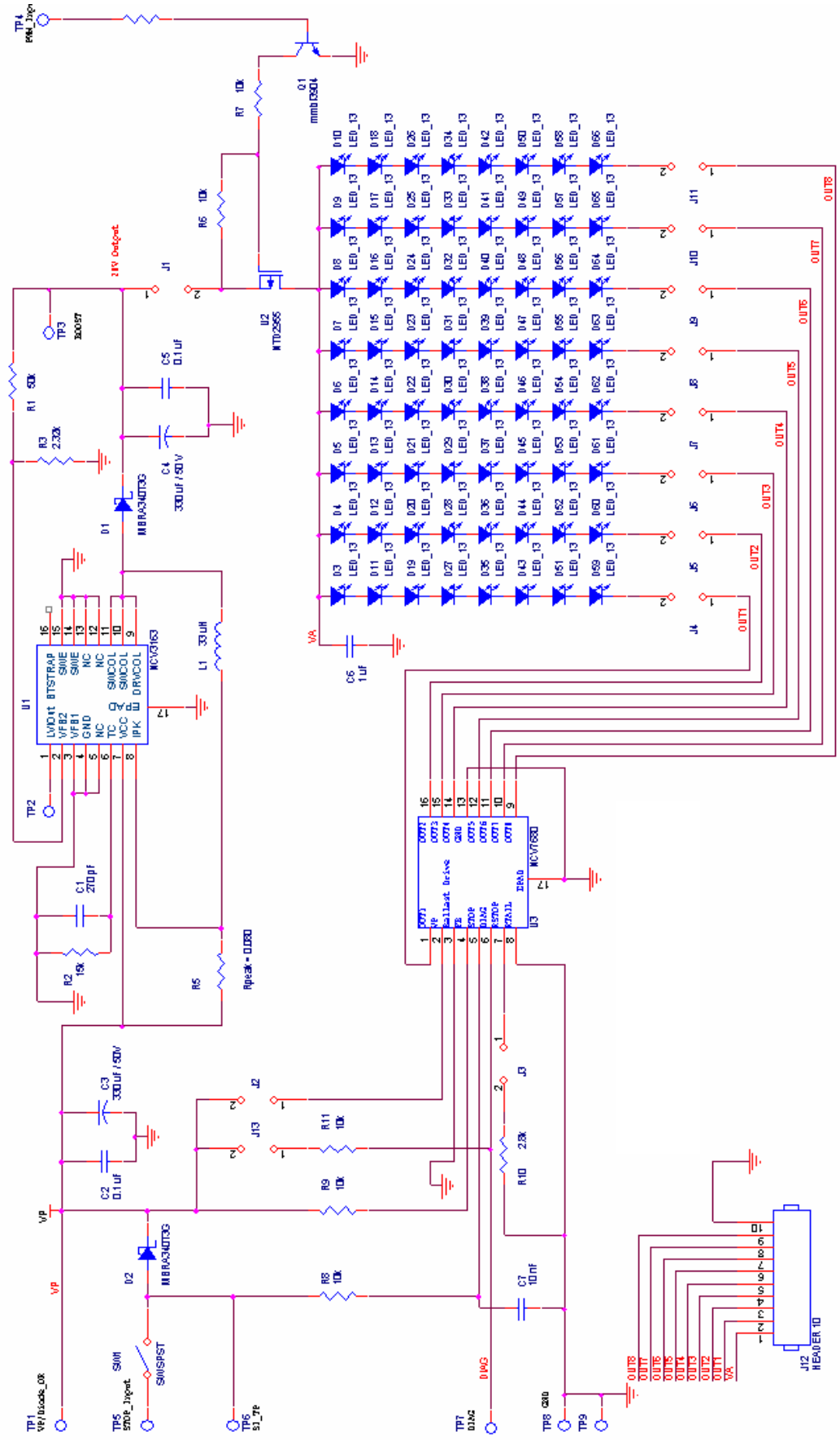

Jumper 1: Allows external source to be connected instead of NCV3163 boost circuit.
Jumper 2: 7680 VP pin connection, allows bias current measurement.
Jumper 3: Allows easy connection to switch RSTOP.
Jumper 4−11: Enables the user to add external LED loads.
Jumper 13: Switch DIAG pull-up resistor.

Figure 2. NCV7680−NCV3163EVB Schematic

Powering Up the Board

Equipment Needed:

- 1 Power Supply (2 A)
- 1 Function Generator (200 Hz)

1. There are 12 jumpers on the board. Start with all 12 jumpers connected. Jumper locations are shown in Figure 3. A list of jumper functionality is shown in the board schematic (Figure 2).
2. Typical connections to the evaluation board are shown in Figure 4. Set the PWM input to a 200 Hz 5 V square wave when using external PWM. To disable PWM and run at 100% duty cycle, connect PWM Input to VP.
3. Connect the power supply, 13.2 V typical for a car battery.
4. Position switch 1 (SW1) left to turn the circuit off, and right to turn the circuit on.

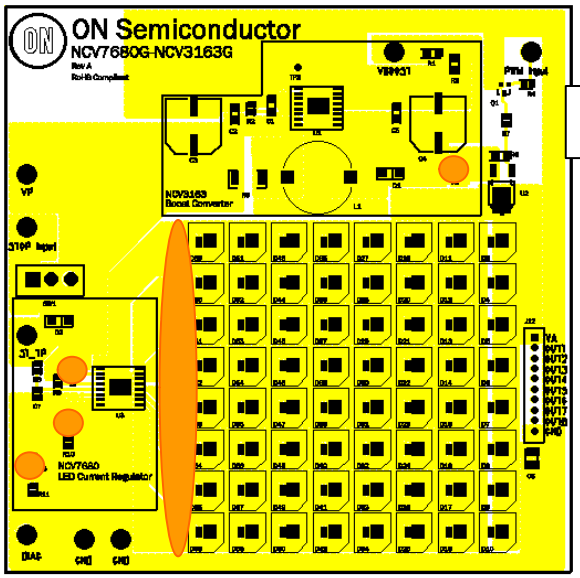

NOTE: Unloaded OUTx pins should be grounded for proper operation.

Figure 3. Jumper Locations

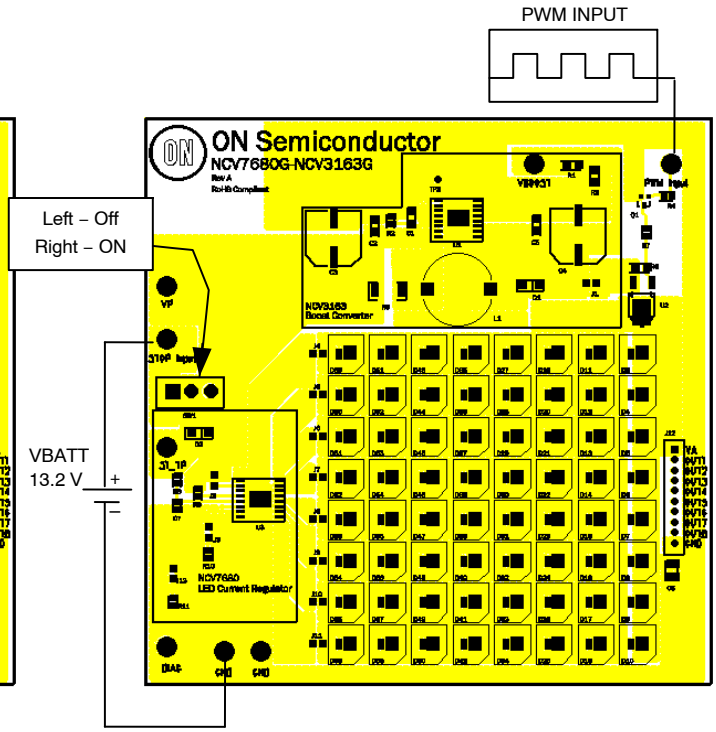

NOTE: For 100% Duty Cycle operation, connect the PWM Input post to the VP post. The default setup (with the 2 posts floating) yields 0% Duty Cycle.

Figure 4. Power Connections

Jumpers 4−11: DIAG Reporting of Open Circuit

Jumpers 4−11 highlight the open circuit functionality of diagnostic pin (DIAG). Monitor DIAG while creating an open circuit by removing any on these jumpers (4−11). DIAG will go high when an open is detected.

NOTE: If external PWM is being used, the DIAG will always report an “open” (high value) while the PWM Input is low (i.e. the LEDs are off). Therefore, to check if an open is occurring on any output LED strand, only check DIAG when PWM Input is high.

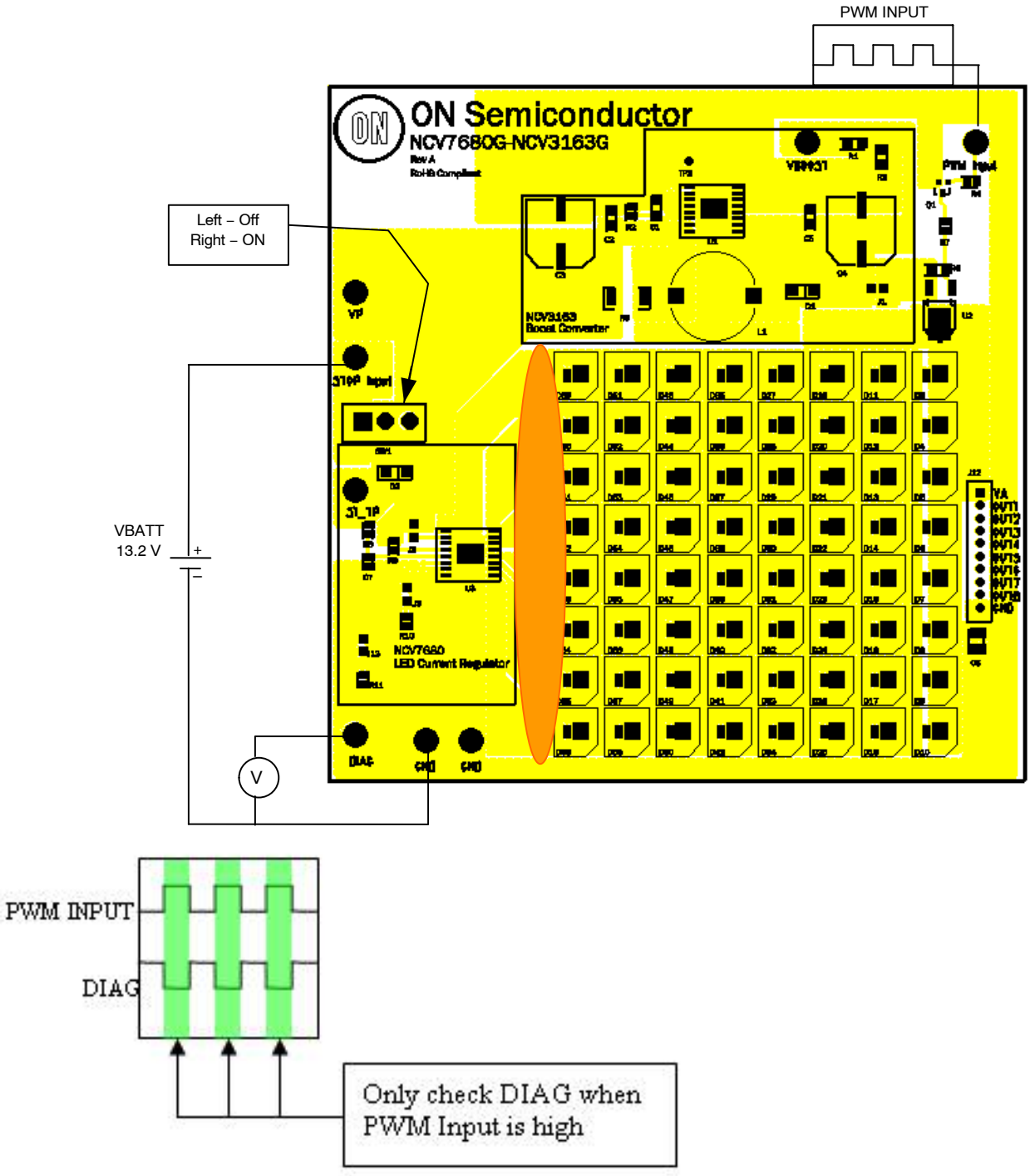

Figure 5. Open Circuit Detection

Jumper 13, DIAG Load

Jumper 13 disconnects the PC board pullup resistor and allows the user to interface their own component and power supply to the DIAG pin.

Disconnect Jumper 13. Connect the external resistor to a separate supply. The DIAG pin is limited to 45 V per the maximum ratings table.

Figure 6 shows the test setup for using DIAG with a separate supply.

Table 1. MAXIMUM RATINGS (Voltages are with respect to device substrate)

Rating	Value	Unit
VP, Ballast Drive, STOP, DIAG DC Peak Transient	 −0.3 to 45 45	V
Output Pin Voltage (OUTX)	−0.3 to 45	V
Output Pin Current (OUTX)	100	mA
Input Voltage (RTAIL, RSTOP, FB)	−0.3 to 5	V
Junction Temperature, T_J	−40 to 150	°C
Peak Reflow Soldering Temperature: Pb-Free 60 to 150 seconds at 217°C (Note 1)	260 Peak	°C

Stresses exceeding those listed in the Maximum Ratings table may damage the device. If any of these limits are exceeded, device functionality should not be assumed, damage may occur and reliability may be affected.

1. For additional information, see or download ON Semiconductor's Soldering and Mounting Techniques Reference Manual, SOLDERRM/D, and Application Note AND8003/D.

Table 2. DIAG OUTPUT

Characteristic	Conditions	Min	Typ	Max	Unit
Output Low Voltage	DIAG Active, I_{DIAG} = 1 mA	–	0.1	0.4	V
Output Leakage Current	V_{DIAG} = 5 V	–	–	10	μA

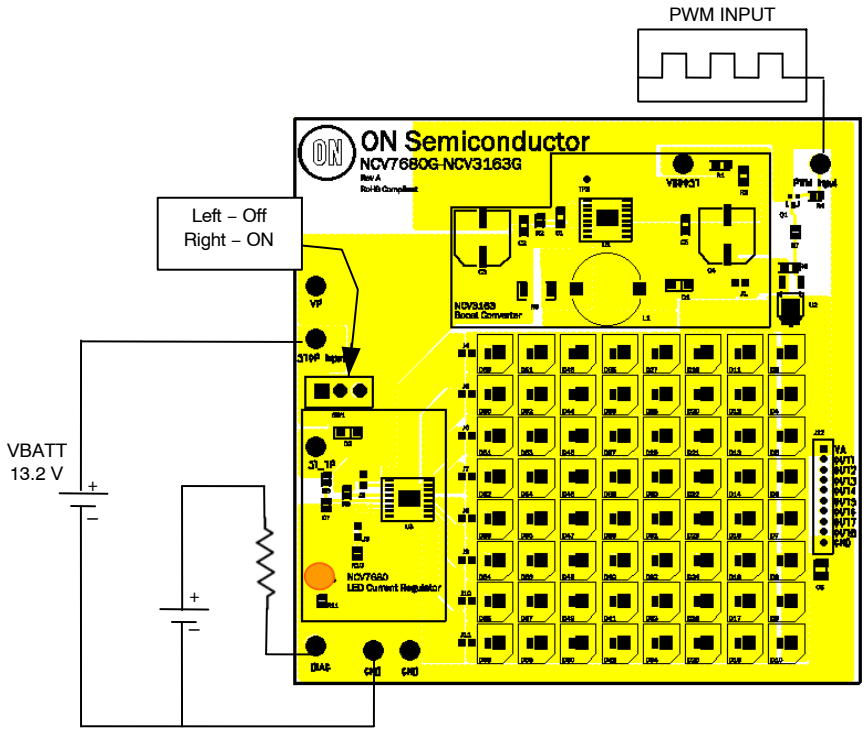

Figure 6. DIAG Connection

Jumper 3, Program Current

Jumper 3 allows the user to program the LED output current.

The value of RSTOP (R10) initially on the board is 4.3 kΩ, 25 mA through each output.

Remove the jumper to disconnect the PC board resistor and connect a different value.

Resistor values and resultant output programmed currents can be calculated using these design equations:

$$OUTX = 100 \times \frac{R_{STOP_BIAS_Voltage}}{R_{STOP}} \quad \text{(eq. 1)}$$

$$R_{STOP_BIAS_Voltage} = 1.08\ V\ (typ)$$

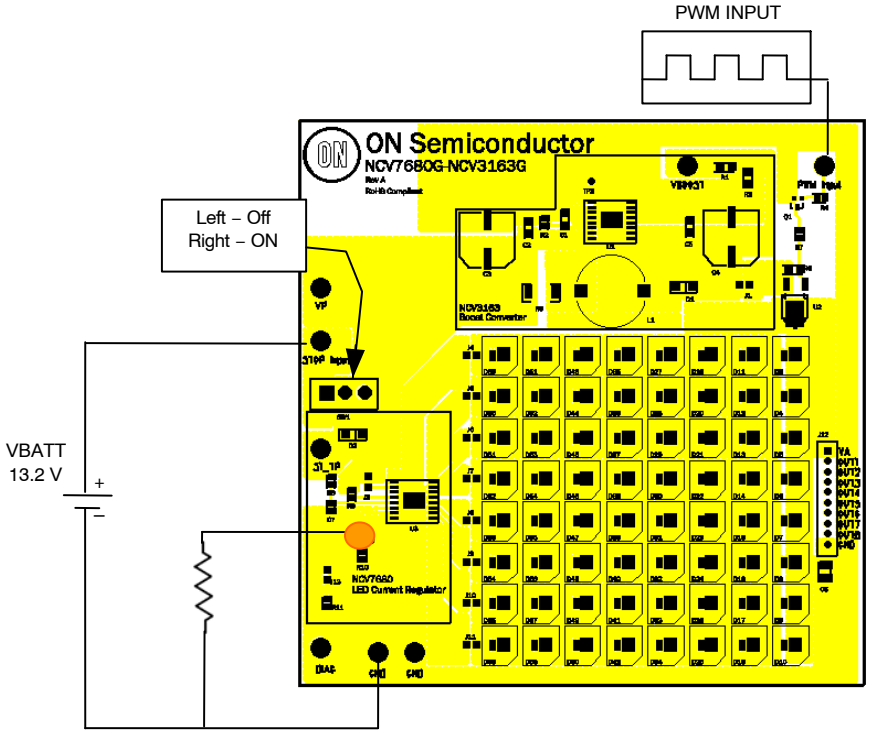

Figure 7. RSTOP Programming Resistor

Jumper 1, Boost Voltage

Jumper 1 disconnects the boost voltage from the LED anode. This allows the user to connect an external source in place of the boost as seen in Figure 8.

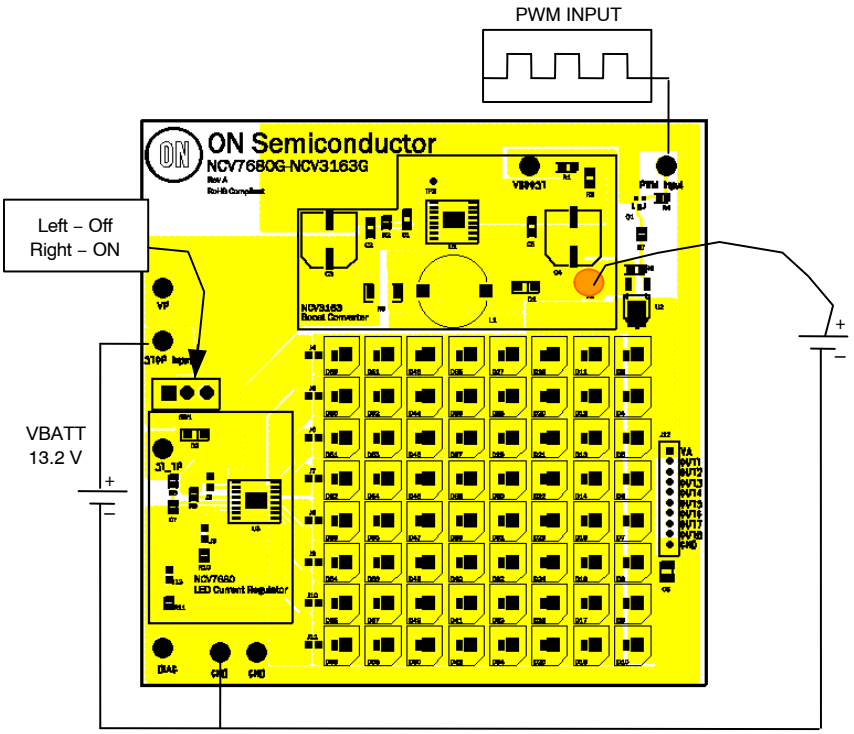

Figure 8. External Boost or Other Source Connection

External LED Connection

Jumpers 4 through 11 allow the user to connect additional LEDs or an entirely different set of LEDs in place of the LEDs on the board. Figure 9 shows an external set of LEDs connected to the board while the on-board LEDs are disconnected (J4−11 removed).

Figure 10 shows how to connect additional LEDs in series with the on-board LEDs to increase the number of LEDs per strand. Note that you will need to increase the boost voltage or use an external source to drive the same current.

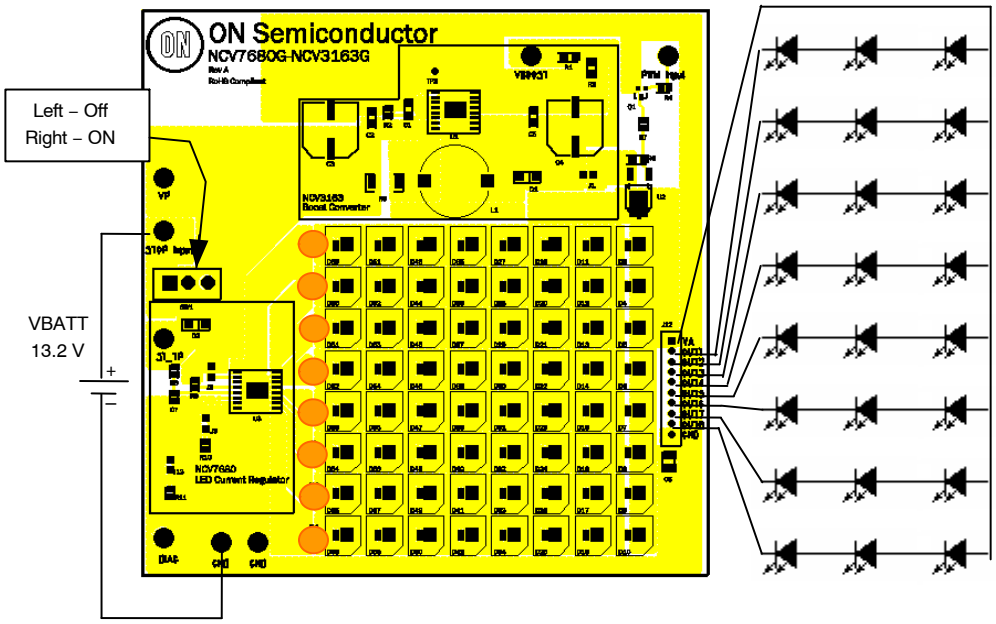

Figure 9. External LEDs

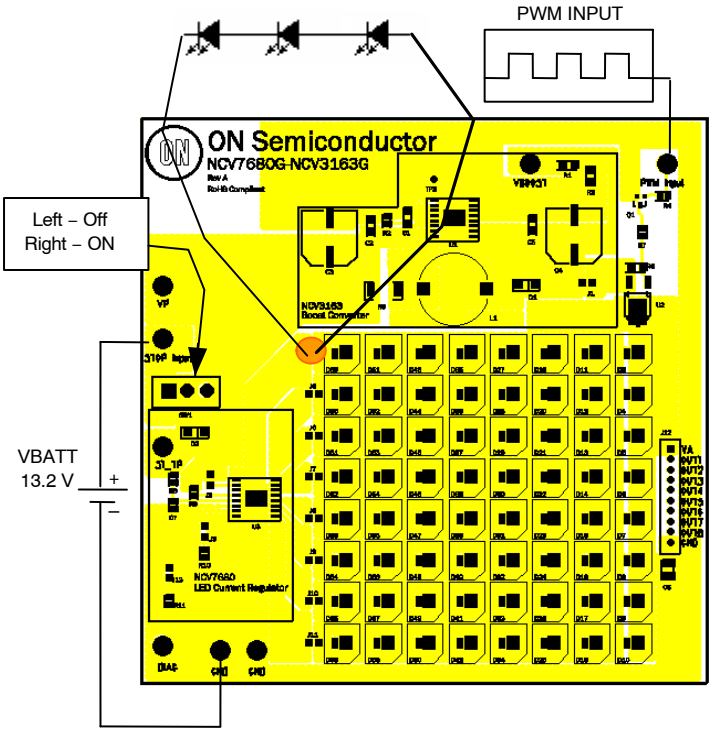

Figure 10. Additional LEDs (Only One Strand Shown)

Boost Voltage

Resistors R3 and R1 set the boost regulation voltage. This resistor network may be changed to regulate to a different voltage. Please follow the NCV3163 design spreadsheet (located at www.onsemi.com).

The internal switch of the NCV3163 is rated at 3.4 A max, raising the regulation voltage or current too high may cause the boost circuit to operate undesirably or require different components.

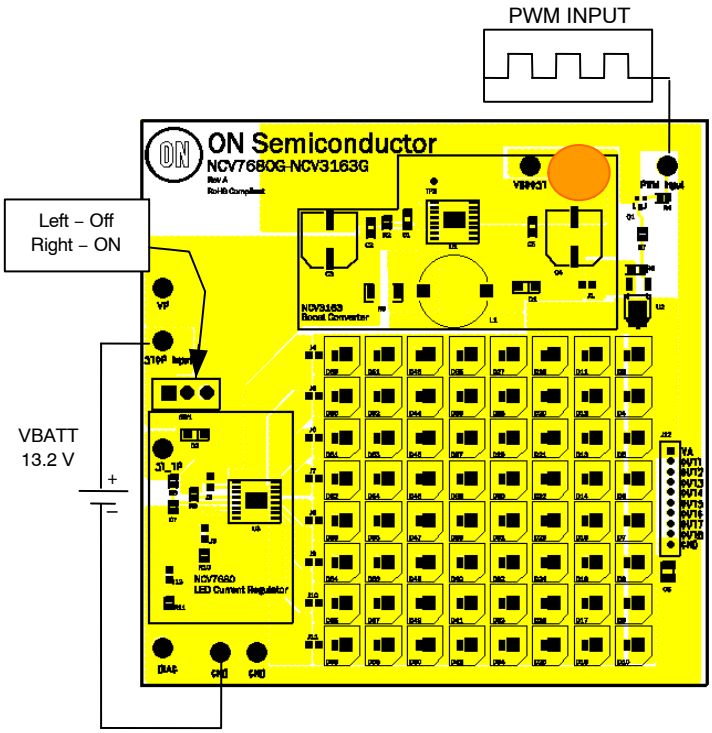

Figure 11. Boost Feedback Resistor Network

Jumper 2, VP Connection

Jumpers 2 allows for measurement of the 7680 bias current.

Table 3. BILL OF MATERIALS (NCV7680−NCV3163 Evaluation Board)

Designator	Qty	Description	Value	Tolerance	Footprint	Manufacturer	Manufacturer Part Number	Substi-tution Allowed
C1	1	Timing Capacitor	100 pF	10%	1206	Yageo	CC1206JRNP09BN101B	Yes
C2, C5	2	Input Capacitor	0.1 μF	10%	1206	Yageo	CC1206KRX7R9BB104	Yes
C3, C4	2	Electrolytic Capacitor	330 μF/50 V	20%	12.5 × 13.5 mm	Panasonic	EEV-TG1H331Q	Yes
C6	1	Output Capacitor	1 μF	10%	1210	Kemet	C1210C105K3RACTU	Yes
C7	1	Debounce Cap	10 nF	10%	805	Yageo	CC0805KRX7R9BB103	Yes
D1, D2	2	Schottky Rectifier	3 A/40 V	–	SMA	ON Semiconductor	MBRA340T3G	No
D3−D66	64	OSRAM TOPLED	Red	–	PLCC-2	OSRAM	LS T67B□S1U1-1-0-30-R18-Z	Yes
J1−J11, J13	13	Jumper (100 mil spacing)	–	–	JMP	Molex-Waldom Electronics Corp	22-28-4103	Yes
J12	1	10 SIP Jumper (100 mil spacing)	–	–	SIP10	Molex-Waldom Electronics Corp	22-28-4023	Yes
L1	1	Inductor	33 μH/4.5 A		15.24 × 18.54 mm	Coilcraft	DO5022P-333	Yes
Q1	1	PWM Logic	–	–	SOT23	ON Semiconductor	MMBT3904LT3G	No
R1	1	Output Program Resistor	49.9 kΩ for 28 V	1%	1206	Vishay	CRCW120649K9FKEA	Yes
R2	1	Timing Resistor	NU	NU	NU	NU	NU	Yes
R3	1	Output Program Resistor	2.32 kΩ	1%	1206	Vishay	CRCW12062K32FKEA	Yes
R4, R7−R9, R11	5	Resistor	10 kΩ	1%	805	Vishay	CRCW080510K0FKEA	Yes
R5	1	Peak Current Sense Resistor	0.08 Ω	1%	2512	Vishay	WSL2512R0800FEB	Yes
R6	1	Pull□up Resistor	10 kΩ	1%	1206	Vishay	CRCW120610K0FKEA	Yes
R10	1	Current Program Resistor	4.3 kΩ (25 mA)	5%	805	Panasonic − ECG	ERJ-6GEYJ432V	Yes
SW1	1	Power Switch	–	–	C&K_7101	C&K	7101SYCQE	Yes
TP1, TP3−TP8	7	Connector Posts	–	–	TURRET	Vector Electronics	K24C/M	Yes
TP2	1	Test Via	NU	NU	NU	NU	NU	Yes
U1	1	NCV3163	–	–	SOIC16W EPAD	ON Semiconductor	NCV3163PWG	No
U2	1	NTD2955	–	–	DPAK	ON Semiconductor	NTD2955T4G	No
U3	1	NCV7680	–	–	SOIC16W EPAD	ON Semiconductor	NCV7680PDWG	No

onsemi, ONSEMI, and other names, marks, and brands are registered and/or common law trademarks of Semiconductor Components Industries, LLC dba "**onsemi**" or its affiliates and/or subsidiaries in the United States and/or other countries. **onsemi** owns the rights to a number of patents, trademarks, copyrights, trade secrets, and other intellectual property. A listing of **onsemi**'s product/patent coverage may be accessed at www.onsemi.com/site/pdf/Patent−Marking.pdf. **onsemi** is an Equal Opportunity/Affirmative Action Employer. This literature is subject to all applicable copyright laws and is not for resale in any manner.

The evaluation board/kit (research and development board/kit) (hereinafter the "board") is not a finished product and is not available for sale to consumers. The board is only intended for research, development, demonstration and evaluation purposes and will only be used in laboratory/development areas by persons with an engineering/technical training and familiar with the risks associated with handling electrical/mechanical components, systems and subsystems. This person assumes full responsibility/liability for proper and safe handling. Any other use, resale or redistribution for any other purpose is strictly prohibited.

THE BOARD IS PROVIDED BY ONSEMI TO YOU "AS IS" AND WITHOUT ANY REPRESENTATIONS OR WARRANTIES WHATSOEVER. WITHOUT LIMITING THE FOREGOING, ONSEMI (AND ITS LICENSORS/SUPPLIERS) HEREBY DISCLAIMS ANY AND ALL REPRESENTATIONS AND WARRANTIES IN RELATION TO THE BOARD, ANY MODIFICATIONS, OR THIS AGREEMENT, WHETHER EXPRESS, IMPLIED, STATUTORY OR OTHERWISE, INCLUDING WITHOUT LIMITATION ANY AND ALL REPRESENTATIONS AND WARRANTIES OF MERCHANTABILITY, FITNESS FOR A PARTICULAR PURPOSE, TITLE, NON−INFRINGEMENT, AND THOSE ARISING FROM A COURSE OF DEALING, TRADE USAGE, TRADE CUSTOM OR TRADE PRACTICE.

onsemi reserves the right to make changes without further notice to any board.

You are responsible for determining whether the board will be suitable for your intended use or application or will achieve your intended results. Prior to using or distributing any systems that have been evaluated, designed or tested using the board, you agree to test and validate your design to confirm the functionality for your application. Any technical, applications or design information or advice, quality characterization, reliability data or other services provided by **onsemi** shall not constitute any representation or warranty by **onsemi**, and no additional obligations or liabilities shall arise from **onsemi** having provided such information or services.

onsemi products including the boards are not designed, intended, or authorized for use in life support systems, or any FDA Class 3 medical devices or medical devices with a similar or equivalent classification in a foreign jurisdiction, or any devices intended for implantation in the human body. You agree to indemnify, defend and hold harmless **onsemi**, its directors, officers, employees, representatives, agents, subsidiaries, affiliates, distributors, and assigns, against any and all liabilities, losses, costs, damages, judgments, and expenses, arising out of any claim, demand, investigation, lawsuit, regulatory action or cause of action arising out of or associated with any unauthorized use, even if such claim alleges that **onsemi** was negligent regarding the design or manufacture of any products and/or the board.

This evaluation board/kit does not fall within the scope of the European Union directives regarding electromagnetic compatibility, restricted substances (RoHS), recycling (WEEE), FCC, CE or UL, and may not meet the technical requirements of these or other related directives.

FCC WARNING − This evaluation board/kit is intended for use for engineering development, demonstration, or evaluation purposes only and is not considered by **onsemi** to be a finished end product fit for general consumer use. It may generate, use, or radiate radio frequency energy and has not been tested for compliance with the limits of computing devices pursuant to part 15 of FCC rules, which are designed to provide reasonable protection against radio frequency interference. Operation of this equipment may cause interference with radio communications, in which case the user shall be responsible, at its expense, to take whatever measures may be required to correct this interference.

onsemi does not convey any license under its patent rights nor the rights of others.

LIMITATIONS OF LIABILITY: **onsemi** shall not be liable for any special, consequential, incidental, indirect or punitive damages, including, but not limited to the costs of requalification, delay, loss of profits or goodwill, arising out of or in connection with the board, even if **onsemi** is advised of the possibility of such damages. In no event shall **onsemi**'s aggregate liability from any obligation arising out of or in connection with the board, under any theory of liability, exceed the purchase price paid for the board, if any.

The board is provided to you subject to the license and other terms per **onsemi**'s standard terms and conditions of sale. For more information and documentation, please visit www.onsemi.com.

ADDITIONAL INFORMATION

TECHNICAL PUBLICATIONS:
Technical Library: www.onsemi.com/design/resources/technical−documentation
onsemi Website: www.onsemi.com

ONLINE SUPPORT: www.onsemi.com/support
For additional information, please contact your local Sales Representative at www.onsemi.com/support/sales