Data sheet



# DBS60E-S1EC00360

## DBS60

INCREMENTAL ENCODERS

SICK
Sensor Intelligence.

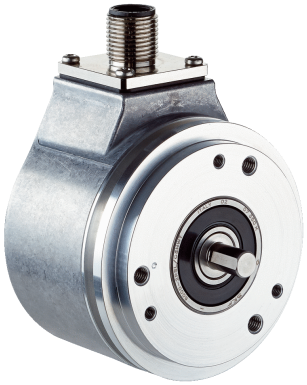

Illustration may differ

## Ordering information

| Type | part no. |
|---|---|
| DBS60E-S1EC00360 | 1087545 |

Other models and accessories ➜ www.sick.com/DBS60

## Detailed technical data

### Safety-related parameters

| | |
|---|---|
| **$MTTF_D$ (mean time to dangerous failure)** | 500 years (EN ISO 13849-1) [1] |

[1] This product is a standard product and does not constitute a safety component as defined in the Machinery Directive. Calculation based on nominal load of components, average ambient temperature 40 °C, frequency of use 8760 h/a. All electronic failures are considered hazardous. For more information, see document no. 8015532.

### Performance

| | |
|---|---|
| **Pulses per revolution** | 360 |
| **Measuring step** | ≤ 90 °, electric/pulses per revolution |
| **Measuring step deviation** | ± 18 ° / pulses per revolution |
| **Error limits** | Measuring step deviation x 3 |
| **Duty cycle** | ≤ 0.5 ± 5 % |

### Interfaces

| | |
|---|---|
| **Communication interface** | Incremental |
| **Communication Interface detail** | HTL / Push pull |
| **Number of signal channels** | 6-channel |
| **Initialization time** | < 5 ms [1] |
| **Output frequency** | + 300 kHz [2] |
| **Load current** | ≤ 30 mA, per channel |
| **Power consumption** | ≤ 1 W (without load) |

[1] Valid signals can be read once this time has elapsed.
[2] Up to 450 kHz on request.

### Electronics

| | |
|---|---|
| **Connection type** | Male connector, M12, 8-pin, radial |

[1] Short-circuit opposite to another channel, US or GND permissable for maximum 30 s.

| | |
|---|---|
| **Supply voltage** | 10 ... 27 V |
| **Reference signal, number** | 1 |
| **Reference signal, position** | 90°, electric, logically gated with A and B |
| **Reverse polarity protection** | ✓ |
| **Short-circuit protection of the outputs** | ✓ [1] |

[1] Short-circuit opposite to another channel, US or GND permissable for maximum 30 s.

## Mechanics

| | |
|---|---|
| **Mechanical design** | Solid shaft, Servo flange |
| **Shaft diameter** | 6 mmWith face |
| **Shaft length** | 10 mm |
| **Flange type / stator coupling** | Flange with 3 x M3 and 3 x M4 |
| **Weight** | + 0.3 kg [1] |
| **Shaft material** | Stainless steel |
| **Flange material** | Aluminum |
| **Housing material** | Aluminum |
| **Start up torque** | + 1.2 Ncm (+20 °C) |
| **Operating torque** | 1.1 Ncm (+20 °C) |
| **Permissible shaft loading** | 100 N (radial) [2]<br>50 N (axial) [2] |
| **Operating speed** | 6,000 $min^{-1}$ [3] |
| **Maximum operating speed** | 9,000 $min^{-1}$ [4] |
| **Moment of inertia of the rotor** | 33 $gcm^2$ |
| **Bearing lifetime** | 3.6 x $10^9$ revolutions |
| **Angular acceleration** | ≤ 500,000 $rad/s^2$ |

[1] Based on encoder with male connector or cable with male connector.
[2] Higher values are possible using limited bearing life.
[3] Allow for self-heating of 3.2 K per 1,000 rpm when designing the operating temperature range.
[4] Maximum speed which does not cause mechanical damage to the encoder. Impact on the service life and signal quality is possible. Please note the maximum output frequency.

## Ambient data

| | |
|---|---|
| **EMC** | According to EN 61000-6-2 and EN 61000-6-3 |
| **Enclosure rating** | IP67, housing side (IEC 60529) [1]<br>IP65, shaft side (IEC 60529) |
| **Permissible relative humidity** | 90 % (Condensation not permitted) |
| **Operating temperature range** | –20 °C ... +85 °C [2] |
| **Storage temperature range** | –40 °C ... +100 °C, without package |
| **Resistance to shocks** | 250 g, 3 ms (EN 60068-2-27) |
| **Resistance to vibration** | 30 g, 10 Hz ... 2,000 Hz (EN 60068-2-6) |

[1] With mating connector fitted.
[2] These values relate to all mechanical versions including recommended accessories unless otherwise noted.

## Certificates

| | |
|---|---|
| **EU declaration of conformity** | ✓ |
| **UK declaration of conformity** | ✓ |
| **ACMA declaration of conformity** | ✓ |
| **China-RoHS** | ✓ |
| **cULus certificate** | ✓ |
| **Information according to Art. 3 of Data Act (Regulation EU 2023/2854)** | ✓ |

## Classifications

| | |
|---|---|
| **ECLASS 5.0** | 27270501 |
| **ECLASS 5.1.4** | 27270501 |
| **ECLASS 6.0** | 27270590 |
| **ECLASS 6.2** | 27270590 |
| **ECLASS 7.0** | 27270501 |
| **ECLASS 8.0** | 27270501 |
| **ECLASS 8.1** | 27270501 |
| **ECLASS 9.0** | 27270501 |
| **ECLASS 10.0** | 27270501 |
| **ECLASS 11.0** | 27270501 |
| **ECLASS 12.0** | 27270501 |
| **ETIM 5.0** | EC001486 |
| **ETIM 6.0** | EC001486 |
| **ETIM 7.0** | EC001486 |
| **ETIM 8.0** | EC001486 |
| **UNSPSC 16.0901** | 41112113 |

## Dimensional drawing

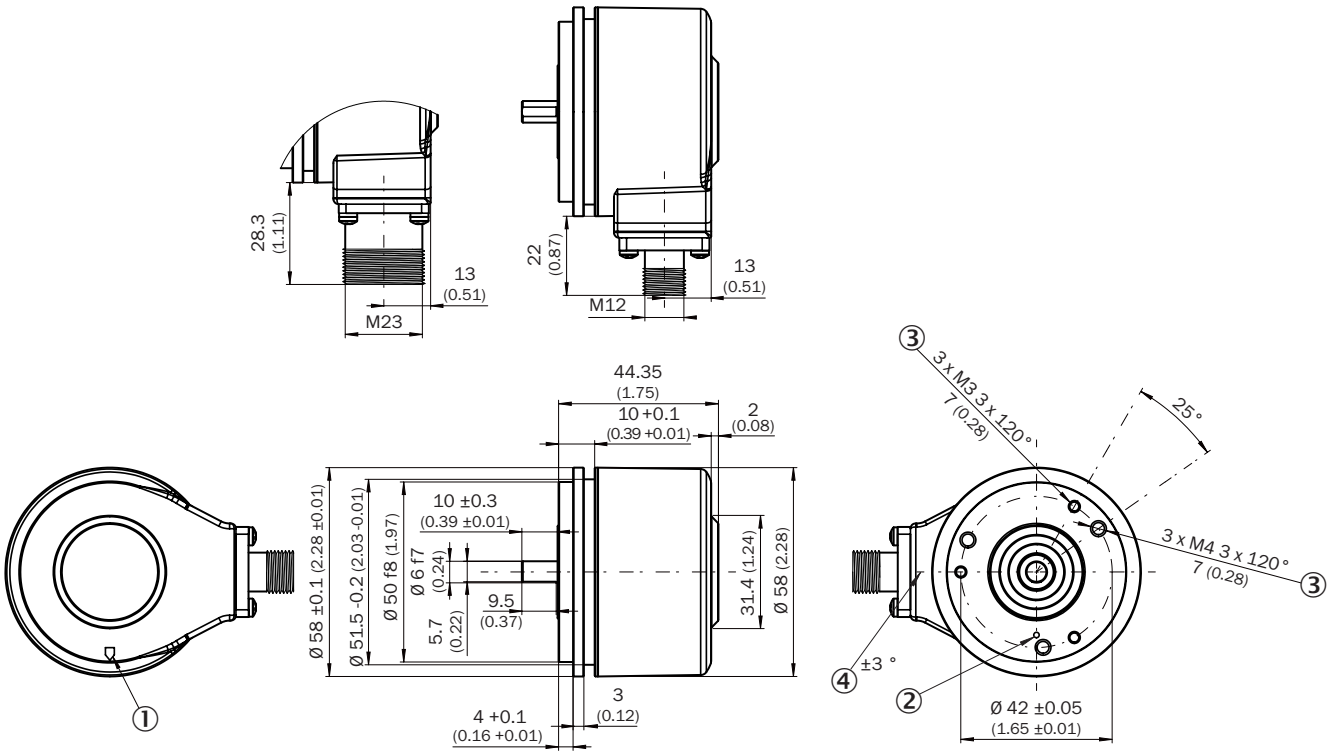


Dimensions in mm (inch)
① Zero pulse mark on housing
② Zero pulse mark on flange
③ depth
④ male connector tolerance in relation to hole pattern

## Attachment specifications Mounting requirements for small servo clamp

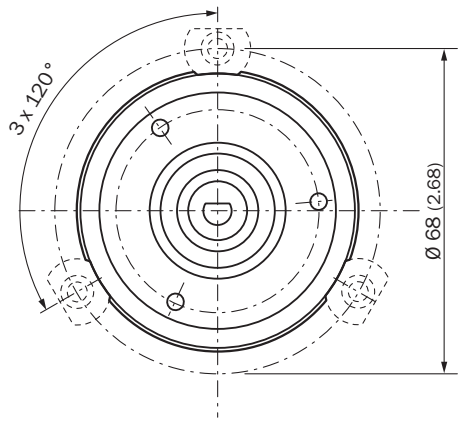


All dimensions in mm (inch)

## Attachment specifications Mounting requirements for half-shell servo clamp

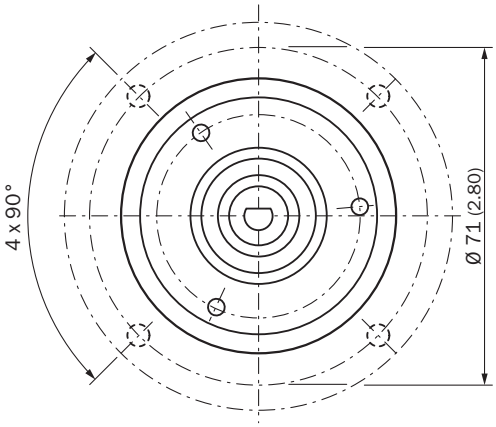


All dimensions in mm (inch)

## PIN assignment

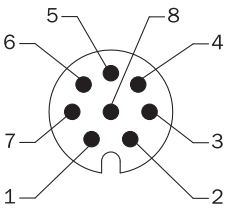


view of M12 male device connector on cable / housing

| Wire colors (cable connection) | Male connector M12, 8-pin | Male connector M23, 12-pin | TTL/HTL 6-channel signal | Explanation |
|---|---|---|---|---|
| Brown | 1 | 6 | A- | Signal wire |
| White | 2 | 5 | A | Signal wire |
| Black | 3 | 1 | B- | Signal wire |
| Pink | 4 | 8 | B | Signal wire |
| Yellow | 5 | 4 | Z- | Signal wire |
| Purple | 6 | 3 | Z | Signal wire |
| Blue | 7 | 10 | GND | Ground connection |
| Red | 8 | 12 | $+U_s$ | Supply voltage |
| - | - | 9 | Not assigned | Not assigned |
| - | - | 2 | Not assigned | Not assigned |
| - | - | 11 | Not assigned | Not assigned |
| - | - | 7 | Not assigned | Not assigned |
| Screen | Screen | Screen | Screen | Screen connected to encoder housing |

## Diagrams

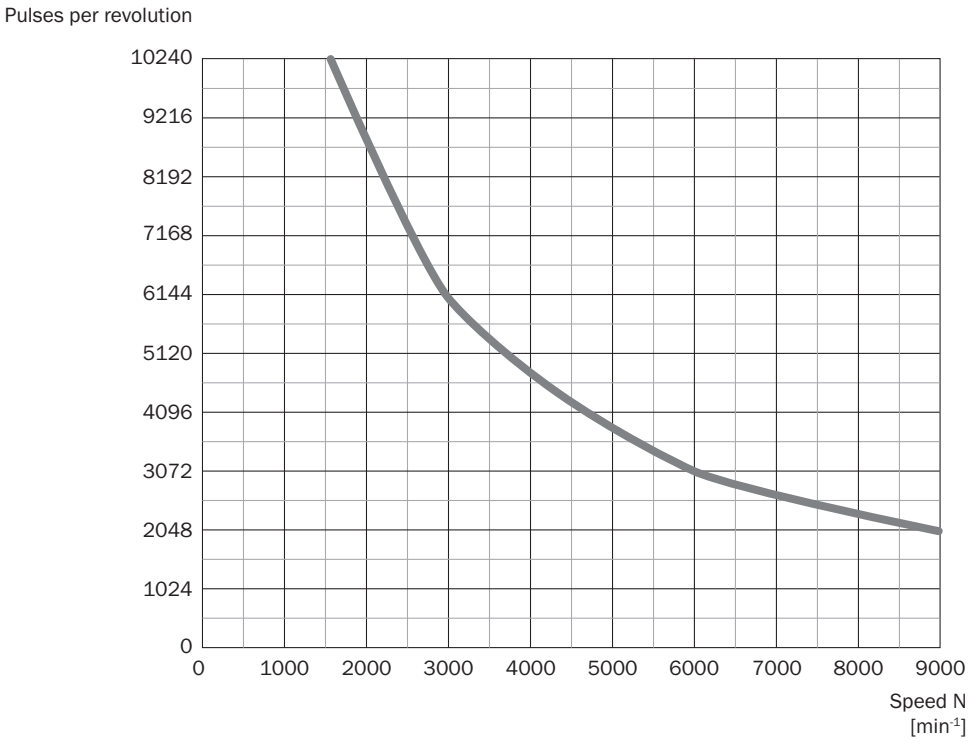


## Diagrams Signal outputs for electrical interfaces TTL and HTL

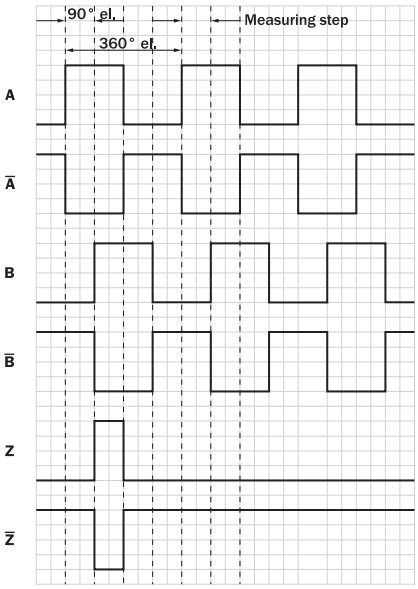


Cw with view on the encoder shaft in direction "A", compare dimensional drawing.

| Supply voltage | Output |
|---|---|
| 4,5 V ... 5,5 V | TTL |
| 10 V ... 30 V | TTL |
| 10 V ... 27 V | HTL |

| Supply voltage | Output |
|---|---|
| 4,5 V ... 30 V | TTL/HTL universal |
| 4,5 V ... 30 V | TTL |

## Operation note Solid shaft, servo flange

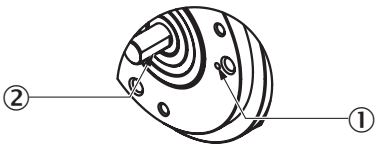


① Zero pulse mark on flange
② Zero pulse active when the surface of the shaft shows the zero pulse mark on the flange

## Recommended accessories

Other models and accessories ➜ www.sick.com/DBS60

| | Brief description | Type | part no. |
|---|---|---|---|
| connectors and cables | | | |
|  | • **Connection type head A:** Flying leads<br>• **Connection type head B:** Flying leads<br>• **Signal type:** SSI, Incremental, HIPERFACE®<br>• **Items supplied:** By the meter<br>• **Cable:** 8-wire, PUR, halogen-free<br>• **Description:** SSI, shielded, Incremental, HIPERFACE® | LTG-2308-MWENC | 6027529 |
|  | • **Connection type head A:** Flying leads<br>• **Connection type head B:** Flying leads<br>• **Signal type:** SSI, Incremental<br>• **Items supplied:** By the meter<br>• **Cable:** 11-wire, PUR<br>• **Description:** SSI, shielded, Incremental | LTG-2411-MW | 6027530 |
|  | • **Connection type head A:** Flying leads<br>• **Connection type head B:** Flying leads<br>• **Signal type:** SSI, Incremental<br>• **Items supplied:** By the meter<br>• **Cable:** 12-wire, PUR, halogen-free<br>• **Description:** SSI, shielded, Incremental | LTG-2512-MW | 6027531 |
|  | • **Connection type head A:** Flying leads<br>• **Connection type head B:** Flying leads<br>• **Signal type:** SSI, TTL, HTL, Incremental<br>• **Items supplied:** By the meter<br>• **Cable:** 12-wire, UV and saltwater-resistant, PUR, halogen-free<br>• **Description:** SSI, shielded, TTL, HTL, Incremental | LTG-2612-MW | 6028516 |
|  | • **Connection type head A:** Female connector, M12, 8-pin, straight<br>• **Connection type head B:** Flying leads<br>• **Signal type:** Incremental, SSI<br>• **Cable:** 2 m, 8-wire, PUR, halogen-free<br>• **Description:** Incremental, shieldedSSI<br>• **Connection systems:** Flying leads | DOL-1208-G02MAC1 | 6032866 |
|  | • **Connection type head A:** Female connector, M12, 8-pin, straight<br>• **Connection type head B:** Flying leads<br>• **Signal type:** Incremental, SSI<br>• **Cable:** 5 m, 8-wire, PUR, halogen-free<br>• **Description:** Incremental, shieldedSSI<br>• **Connection systems:** Flying leads | DOL-1208-G05MAC1 | 6032867 |
|  | • **Connection type head A:** Female connector, M12, 8-pin, straight<br>• **Connection type head B:** Flying leads<br>• **Signal type:** Incremental, SSI<br>• **Cable:** 10 m, 8-wire, PUR, halogen-free<br>• **Description:** Incremental, shieldedSSI<br>• **Connection systems:** Flying leads | DOL-1208-G10MAC1 | 6032868 |
|  | • **Connection type head A:** Female connector, M12, 8-pin, straight<br>• **Connection type head B:** Flying leads<br>• **Signal type:** Incremental, SSI<br>• **Cable:** 20 m, 8-wire, PUR, halogen-free<br>• **Description:** Incremental, shieldedSSI<br>• **Connection systems:** Flying leads | DOL-1208-G20MAC1 | 6032869 |
|  | • **Connection type head A:** Female connector, M12, 8-pin, straight<br>• **Connection type head B:** Flying leads<br>• **Signal type:** Incremental, SSI<br>• **Cable:** 25 m, 8-wire, PUR, halogen-free<br>• **Description:** Incremental, shieldedSSI<br>• **Connection systems:** Flying leads | DOL-1208-G25MAC1 | 6067859 |
|  | • **Connection type head A:** Female connector, M12, 8-pin, straight, A-coded<br>• **Signal type:** Incremental, SSI<br>• **Cable:** CAT5, CAT5e<br>• **Description:** Incremental, shieldedSSI<br>• **Connection systems:** IDC quick connection<br>• **Permitted cross-section:** 0.14 mm² ... 0.34 mm² | DOS-1208-GA01 | 6045001 |
|  | • **Connection type head A:** Female connector, M12, 8-pin, straight, A-coded<br>• **Connection type head B:** Male connector, M12, 8-pin, straight, A-coded<br>• **Cable:** 20 m, 8-wire, PUR, halogen-free<br>• **Description:** Shielded | YF2AA8-200S01M-KA18 | 2099208 |

| | Brief description | Type | part no. |
|---|---|---|---|
| | • **Permitted cross-section:** ≤ 0.25 mm²<br>• **Note:** Drag chain use<br>• **Application:** Drag chain operation | | |
|  | • **Connection type head A:** Female connector, M12, 8-pin, straight, A-coded<br>• **Connection type head B:** Male connector, M12, 8-pin, straight, A-coded<br>• **Cable:** 2 m, 8-wire, PUR, halogen-free<br>• **Description:** Shielded<br>• **Permitted cross-section:** ≤ 0.25 mm²<br>• **Note:** Drag chain use<br>• **Application:** Drag chain operation | YF2AA8-020S01M-KA18 | 2099207 |
|  | • **Connection type head A:** Female connector, M12, 8-pin, straight, A-coded<br>• **Connection type head B:** Male connector, M12, 8-pin, straight, A-coded<br>• **Cable:** 5 m, 8-wire, PUR, halogen-free<br>• **Description:** Shielded<br>• **Permitted cross-section:** ≤ 0.25 mm²<br>• **Note:** Drag chain use<br>• **Application:** Drag chain operation | YF2AA8-050S01M-KA18 | 2099209 |
|  | • **Connection type head A:** Female connector, M12, 8-pin, straight, A-coded<br>• **Connection type head B:** Male connector, M12, 8-pin, straight, A-coded<br>• **Cable:** 10 m, 8-wire, PUR, halogen-free<br>• **Description:** Shielded<br>• **Permitted cross-section:** ≤ 0.25 mm²<br>• **Note:** Drag chain use<br>• **Application:** Drag chain operation | YF2AA8-100S01M-KA18 | 2099210 |
|  | • **Connection type head A:** Female connector, M12, 8-pin, angled<br>• **Connection type head B:** Flying leads<br>• **Signal type:** HIPERFACE®, Incremental<br>• **Cable:** 2 m, 8-wire, PUR, halogen-free<br>• **Description:** HIPERFACE®, shieldedIncremental | DOL-1208-W02MAC1 | 6037724 |
|  | • **Connection type head A:** Female connector, M12, 8-pin, angled<br>• **Connection type head B:** Flying leads<br>• **Signal type:** HIPERFACE®, Incremental<br>• **Cable:** 5 m, 8-wire, PUR, halogen-free<br>• **Description:** HIPERFACE®, shieldedIncremental | DOL-1208-W05MAC1 | 6037725 |
|  | • **Connection type head A:** Female connector, M12, 8-pin, angled<br>• **Connection type head B:** Flying leads<br>• **Signal type:** HIPERFACE®, Incremental<br>• **Cable:** 10 m, 8-wire, PUR, halogen-free<br>• **Description:** HIPERFACE®, shieldedIncremental | DOL-1208-W10MAC1 | 6037726 |
|  | • **Connection type head A:** Female connector, M12, 8-pin, angled<br>• **Connection type head B:** Flying leads<br>• **Signal type:** HIPERFACE®, Incremental<br>• **Cable:** 20 m, 8-wire, PUR<br>• **Description:** HIPERFACE®, shieldedIncremental | DOL-1208-W20MAC1 | 6037727 |
|  | • **Connection type head A:** Female connector, M12, 8-pin, angled<br>• **Connection type head B:** Flying leads<br>• **Cable:** 2 m, 8-wire, PVC<br>• **Description:** Shielded<br>• **Connection systems:** Flying leads | DOL-1208-W02MA | 6020992 |
|  | • **Connection type head A:** Female connector, M12, 8-pin, angled<br>• **Connection type head B:** Flying leads<br>• **Signal type:** Sensor/actuator cable<br>• **Cable:** 2 m, 8-wire, PUR, halogen-free<br>• **Description:** Sensor/actuator cable, shielded<br>• **Connection systems:** Flying leads | DOL-1208-W02MAS01 | 6029224 |
|  | • **Connection type head A:** Female connector, M12, 8-pin, angled<br>• **Connection type head B:** Flying leads<br>• **Cable:** 2 m, 8-wire, PUR, halogen-free<br>• **Description:** Unshielded | DOL-1208-W02MC | 6035623 |
|  | • **Connection type head A:** Female connector, M12, 8-pin, angled<br>• **Connection type head B:** Flying leads<br>• **Cable:** 5 m, 8-wire, PVC<br>• **Description:** Shielded | DOL-1208-W05MA | 6021033 |

| | Brief description | Type | part no. |
|---|---|---|---|
| | • **Connection systems:** Flying leads | | |
|  | • **Connection type head A:** Female connector, M12, 8-pin, angled<br>• **Connection type head B:** Flying leads<br>• **Cable:** 5 m, 8-wire, PUR<br>• **Description:** Unshielded | DOL-1208-W05MC | 6035624 |
|  | • **Connection type head A:** Female connector, M12, 8-pin, angled<br>• **Connection type head B:** Flying leads<br>• **Cable:** 10 m, 8-wire, PUR, halogen-free<br>• **Description:** Unshielded | DOL-1208-W10MC | 6035625 |
| Mounting systems | | | |
|  | • **Description:** Bearing block for servo and face mount flange encoder. The heavy-duty bearing block is used to absorb very large radial and axial shaft loads. Particularly when using belt pulleys, chain sprockets, friction wheels. Operating speed max. 4,000 rpm^-1, axial shaft load 150 N, radial shaft load 250 N, bearing service life 3.6 x 10^9 revolutions | BEF-FA-LB1210 | 2044591 |
| | • **Description:** Mounting kit for servo flange encoder on the bearing block, 1 bar coupling SKPS 1520 06/06 1 hexagon socket wrench SW1.5 DIN 911, 3 mounting eccentric BEMN 1242 49 3 screws M4 x 10 DIN 912,1 hexagon socket wrench SW3 DIN 911<br>• **Items supplied:** 1 bar coupling SKPS 1520 06/06 1 hexagon socket wrench SW1.5 DIN 911, 3 mounting eccentric BEMN 1242 49 3 screws M4 x 10 DIN 912, 1 hexagon socket wrench SW3 DIN 911 | BEF-MK-LB | 5320872 |
|  | • **Description:** Mounting bell for encoder with servo flange, 50 mm spigot<br>• **Items supplied:** Mounting kit included | BEF-MG-50 | 5312987 |
|  | • **Description:** Half-shell servo clamps (2 pcs.) for servo flanges with a 50 mm centering hub | BEF-WG-SF050 | 2029165 |
|  | • **Description:** Servo clamps, large, for servo flange (clamps, eccentric fastener), 3 pcs, without mounting material<br>• **Items supplied:** Without mounting hardware | BEF-WK-SF | 2029166 |

| | Brief description | Type | part no. |
|---|---|---|---|
| shaft adaptation | | | |
|  | • **Product segment:** Shaft adaptation<br>• **Product:** Shaft couplings<br>• **Description:** Bellows coupling, shaft diameter 6 mm / 10 mm, maximum shaft offset: radial ± 0.25 mm, axial ± 0.4 mm, angular +/- 4°; max. speed 10,000 rpm, –30 °C to +120 °C, max. torque 120 Ncm; material: stainless steel bellows, aluminum hub | KUP-0610-B | 5312982 |
|  | • **Product segment:** Shaft adaptation<br>• **Product:** Shaft couplings<br>• **Description:** Spring washer coupling, shaft diameter 6 mm / 10 mm, Maximum shaft offset: radial +/- 0.3 mm, axial +/- 0.4 mm, angular +/- 2.5°; max. speed 12,000 rpm, –10° to +80 °C, max. torque 60 Ncm; material: aluminum flange, glass fiber-reinforced polyamide membrane and hardened steel coupling pin | KUP-0610-F | 5312985 |
|  | • **Product segment:** Shaft adaptation<br>• **Product:** Shaft couplings<br>• **Description:** Double loop coupling, shaft diameter 6 mm / 10 mm, max. shaft offset: radially +/- 2,5 mm, axially +/-3 mm, angle +/- 10 degrees;max. speed 3.000 rpm, –30 to +80 degrees Celsius, torsional spring stiffness of 25 Nm/rad | KUP-0610-D | 5326697 |
| 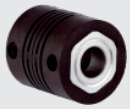 | • **Product segment:** Shaft adaptation<br>• **Product:** Shaft couplings<br>• **Description:** Bar coupling, shaft diameter 6 mm / 10 mm, max. shaft offset: radial ± 0,3 mm, axial ± 0,3 mm, angular ± 3°; max. speed 10.000 rpm, –10° to +80 °C, max. torque: 80 Ncm, material: fiber-glass reinforced polyamide, aluminum hub | KUP-0610-S | 2056407 |
|  | • **Product segment:** Shaft adaptation<br>• **Product:** Shaft couplings<br>• **Description:** Claw coupling, shaft diameter 6 mm / 10 mm, damping element 80 shore blue, maximum shaft offset: radial ± 0.22 mm, axial ± 1 mm angular ± 1.3°, max. speed 19,000 rpm, angle of twist max. 10°, –30 °C to +80 °C, max. torque 800 Ncm, tightening torque of screws: ISO 4029 150 Ncm, material: aluminum flange, damping element: polyurethane | KUP-0610-J | 2127056 |
|  | • **Product segment:** Shaft adaptation<br>• **Product:** Shaft couplings<br>• **Description:** Bar coupling, shaft diameter 6 mm /8 mm, maximum shaft offset radial ± 0.3 mm, axial ± 0.2 mm, angle ± 3°, max. speed 10,000 rpm, torsion spring rigidity 38 Nm/wheel; material: fiber-glass reinforced polyamide, aluminum hub | KUP-0608-S | 5314179 |
|  | • **Product segment:** Shaft adaptation<br>• **Product:** Shaft couplings<br>• **Description:** Cross-slotted coupling, shaft diameter 6 mm / 6 mm, maximum shaft offset: radial ± 0.3 mm, axial ± 0.2 mm, angle ± 3°; max. speed 10,000 rpm, –10° to +80 °C, max. torque 80 Ncm; material: fiber-glass reinforced polyamide, aluminum hub | KUP-0606-S | 2056406 |
|  | • **Product segment:** Shaft adaptation<br>• **Product:** Shaft couplings<br>• **Description:** Bellows coupling, shaft diameter 6 mm / 6 mm, maximum shaft offset: radial ± 0.25 mm, axial ± 0.4 mm, angular +/- 4°; max. speed 10,000 rpm, –30 °C to +120 °C, max. torque 120 Ncm; material: stainless steel bellows, aluminum hub | KUP-0606-B | 5312981 |

| | Brief description | Type | part no. |
|---|---|---|---|
| measuring wheels and measuring wheel mechanics | | | |
| | • **Product segment:** Measuring wheels and measuring wheel mechanics<br>• **Product family:** Measuring wheel mechanics<br>• **Description:** O-ring for measuring wheels (circumference 200 mm) | BEF-OR-053-040 | 2064061 |
| | • **Product segment:** Measuring wheels and measuring wheel mechanics<br>• **Product family:** Measuring wheel mechanics<br>• **Description:** O-ring for measuring wheels (circumference 300 mm)<br>• **Items supplied:** 2x O-ring | BEF-OR-083-050 | 2064076 |
| | • **Product segment:** Measuring wheels and measuring wheel mechanics<br>• **Product family:** Measuring wheel mechanics | BEF-OR-145-050 | 2064074 |

| | Brief description | Type | part no. |
|---|---|---|---|
| | • **Description:** O-ring for measuring wheels (circumference 500 mm) | | |
|  | • **Product segment:** Measuring wheels and measuring wheel mechanics<br>• **Product family:** Measuring wheels<br>• **Description:** Aluminum measuring wheel with studded polyurethane surface for 6 mm solid shaft, circumference 200 mm | BEF-MR06200APN | 4084747 |
| 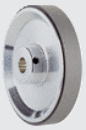 | • **Product segment:** Measuring wheels and measuring wheel mechanics<br>• **Product family:** Measuring wheels<br>• **Description:** Aluminum measuring wheel with smooth polyurethane surface for 6 mm solid shaft, circumference 200 mm | BEF-MR06200AP | 4084746 |
|  | • **Product segment:** Measuring wheels and measuring wheel mechanics<br>• **Product family:** Measuring wheels<br>• **Description:** Aluminum measuring wheel with cross-knurled surface for 6 mm solid shaft, circumference 200 mm | BEF-MR06200AK | 4084745 |
|  | • **Product segment:** Measuring wheels and measuring wheel mechanics<br>• **Product family:** Measuring wheels<br>• **Description:** Aluminum measuring wheel with ridged polyurethane surface for 6 mm solid shaft, circumference 200 mm | BEF-MR06200APG | 4084748 |
|  | • **Product segment:** Measuring wheels and measuring wheel mechanics<br>• **Product family:** Measuring wheels<br>• **Description:** Aluminium measuring wheel with O-ring (NBR70) for 6 mm solid shaft, circumference 200 mm | BEF-MR006020R | 2055222 |
|  | • **Product segment:** Measuring wheels and measuring wheel mechanics<br>• **Product family:** Measuring wheels<br>• **Description:** Measuring wheel with O-ring (NBR70) for 6 mm solid shaft, circumference 300 mm | BEF-MR006030R | 2055634 |
|  | • **Product segment:** Measuring wheels and measuring wheel mechanics<br>• **Product family:** Measuring wheels<br>• **Description:** Aluminium measuring wheel with O-ring (NBR70) for 6 mm solid shaft, circumference 500 mm | BEF-MR006050R | 2055225 |

# SICK AT A GLANCE

SICK is one of the leading manufacturers of intelligent sensors and sensor solutions for industrial applications. A unique range of products and services creates the perfect basis for controlling processes securely and efficiently, protecting individuals from accidents and preventing damage to the environment.

We have extensive experience in a wide range of industries and understand their processes and requirements. With intelligent sensors, we can deliver exactly what our customers need. In application centers in Europe, Asia and North America, system solutions are tested and optimized in accordance with customer specifications. All this makes us a reliable supplier and development partner.

Comprehensive services complete our offering: SICK LifeTime Services provide support throughout the machine life cycle and ensure safety and productivity.

**For us, that is “Sensor Intelligence.”**

# WORLDWIDE PRESENCE:

Contacts and other locations –www.sick.com