REL-OR3/LDP-220DC/3X21 - Single relay

2907027

https://www.phoenixcontact.com/us/products/2907027

Please be informed that the data shown in this PDF document is generated from our online catalog. Please find the complete data in the user documentation. Our general terms of use for downloads are valid.



Plug-in octal relay with power contacts, 3 change-over contacts, test key, mechanical switch position display, coil voltage: 220 V DC, response voltage at 23 °C without pre-excitation ≥60 % ... 80 % of the rated voltage (≥132 V DC ... ≤176 V DC)

Commercial data

Item number	2907027
Packing unit	10 pc
Minimum order quantity	10 pc
Sales key	C460
Product key	CK6953
Catalog page	Page 308 (C-5-2019)
GTIN	4055626159959
Weight per piece (including packing)	92.88 g
Weight per piece (excluding packing)	92 g
Customs tariff number	85364900
Country of origin	PL

Technical data

Product properties

Product type	Single relay
Operating mode	100% operating factor
Mechanical service life	1x 10^7 cycles, approximately

Insulation characteristics

Insulation	Basic insulation

Insulation characteristics

Insulation	Basic insulation
Overvoltage category	III
Pollution degree	3

Electrical properties

Maximum power dissipation for nominal condition	1.76 W
Test voltage (Winding/contact)	2.5 kV_{rms} (50 Hz, 1 min., winding/contact)
Test voltage (Changeover contact/changeover contact)	2 kV_{rms} (50 Hz, 1 min., changeover contact/changeover contact)
Rated insulation voltage	250 V AC
Rated surge voltage	4 kV

Input data

Coil side

Nominal input voltage U_N	220 V DC
Input voltage range	187 V DC ... 242 V DC
Input voltage range in reference to U_N	see diagram
Drive and function	monostable
Drive (polarity)	polarized
Typical input current at U_N	8 mA
Typical response time	18 ms
Typical release time	7 ms
Protective circuit	Freewheeling diode
Status display	Yellow LED

Output data

Switching

Contact switching type	3 changeover contacts
Type of switch contact	Single contact
Contact material	AgNi
Maximum switching voltage	250 V AC/DC
Minimum switching voltage	10 V (At 24 mA)
Limiting continuous current	10 A

Maximum inrush current	30 A (20 ms, N/O contacts)
Min. switching current	10 mA (at 24 V)
Interrupting rating (ohmic load) max.	240 W (at 24 V DC)
	124 W (at 48 V DC)
	108 W (at 60 V DC)
	52 W (at 110 V DC)
	48 W (at 220 V DC)
	2500 VA (for 250 V AC)
Switching capacity min.	0.24 W
Switching capacity	2 A (at 24 V, DC13)
	1.5 A (at 230 V, AC15)

Connection data

Connection method	Plug-in connection

Dimensions

Width	35 mm
Height	35 mm
Depth	54.4 mm

Environmental and real-life conditions

Ambient conditions

Degree of protection	RT I
Ambient temperature (operation)	-40 °C ... 70 °C
Ambient temperature (storage/transport)	-40 °C ... 85 °C

Approvals

Corrosive gas test

Identification	ISA-S71.04. G3 Harsh Group
	EN 60068-2-60

Standards and regulations

Standards/regulations	IEC 60664
	IEC 61810

Mounting

Mounting position	any

Drawings

Diagram

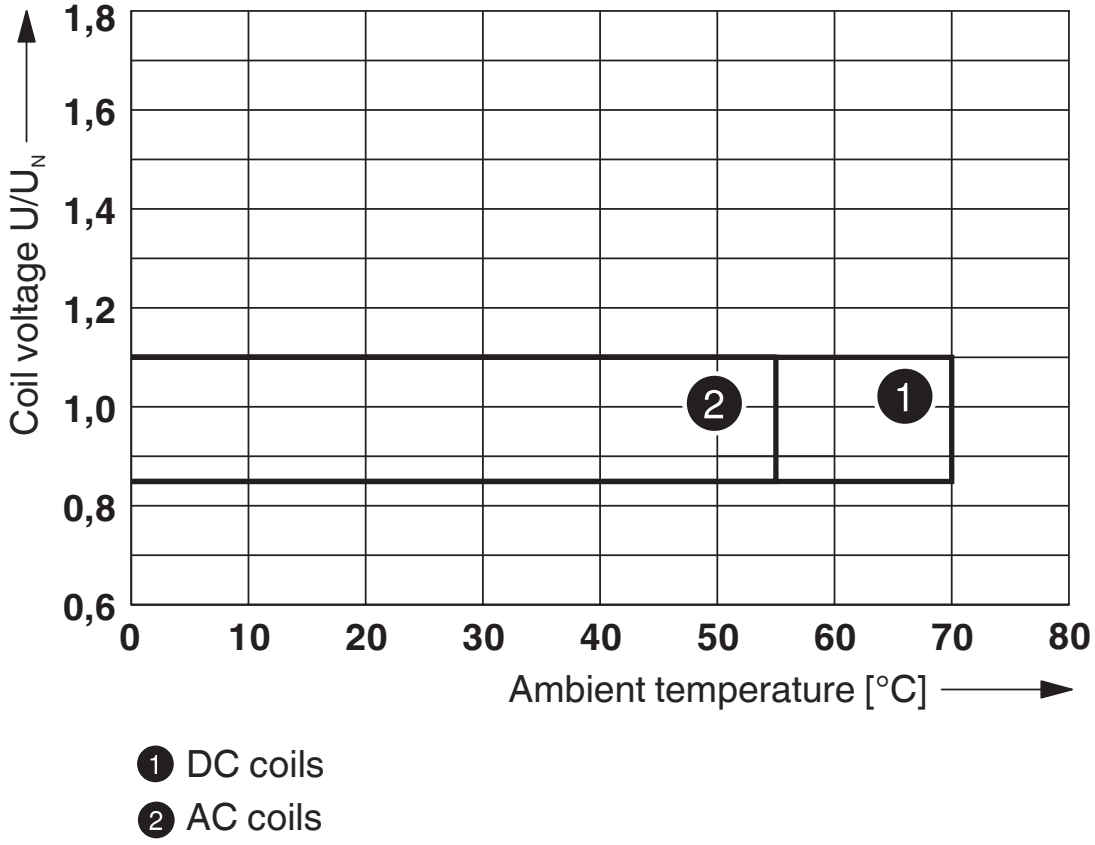

1 DC coils

2 AC coils

Operating voltage range

Diagram

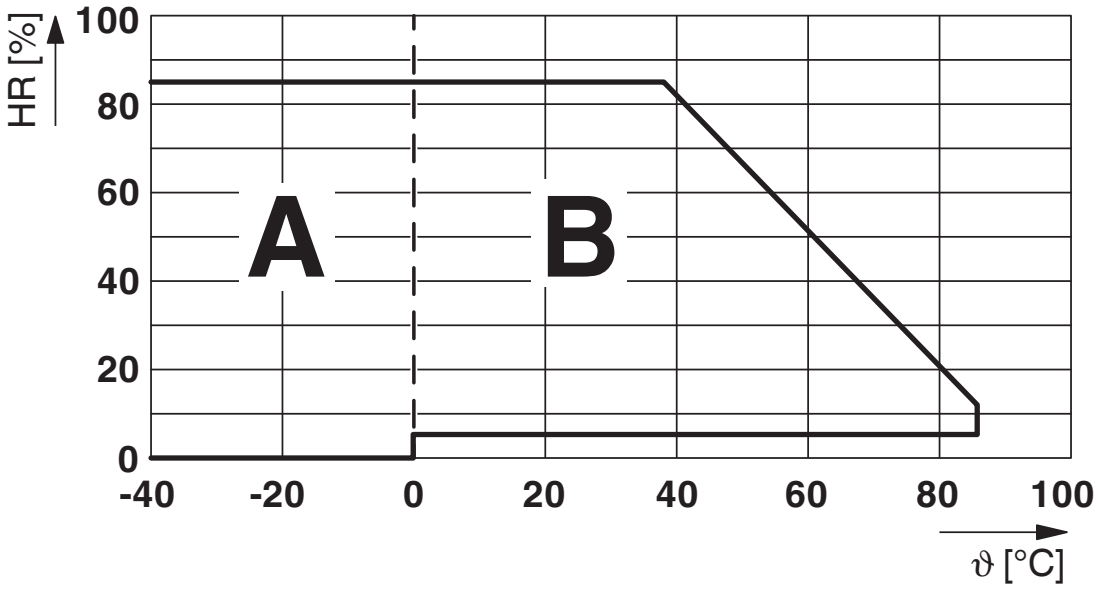

Permissible humidity for operation and storage.
The maximum permissible ambient temperature as specified in the data sheet must be observed.

Area A: Ice buildup at ambient temperatures ≤ 0°C must be prevented
Area B: Condensation at ambient temperatures > 0°C must be prevented

On 30 full days that are naturally distributed across an entire year, a humidity level of 95% is permissible at an ambient temperature ≤ 25°C.

Circuit diagram

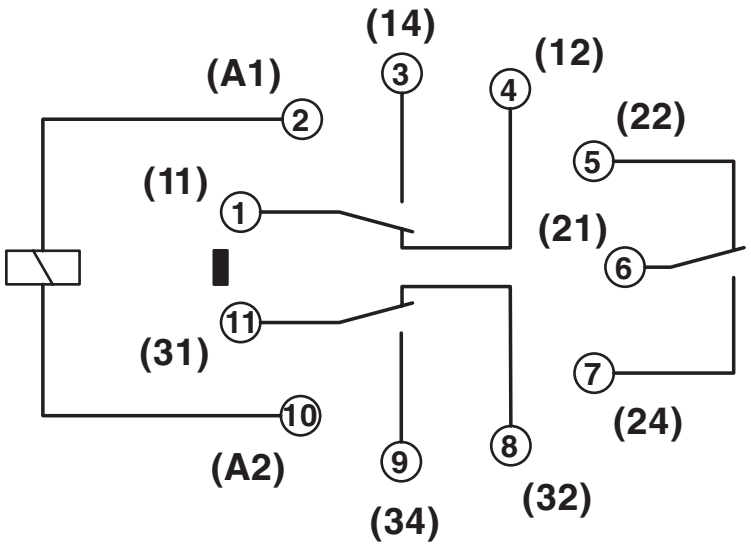

Approvals

To download certificates, visit the product detail page: https://www.phoenixcontact.com/us/products/2907027

CSA
Approval ID: 256725

cUL Recognized
Approval ID: FILE E 172140

UL Recognized
Approval ID: FILE E 172140

EAC
Approval ID: TR_TS_D_00573_c

EAC
Approval ID: RU*C-DE.*08.B.00010

cULus Recognized

Classifications

ECLASS

ECLASS-11.0	27371601
ECLASS-12.0	27371601
ECLASS-13.0	27371601

ETIM

ETIM 9.0	EC001437

UNSPSC

UNSPSC 21.0	39122300

Environmental product compliance

EU RoHS

Fulfills EU RoHS substance requirements	Yes, No exemptions

China RoHS

Environment friendly use period (EFUP)	EFUP-E
	No hazardous substances above the limits

EU REACH SVHC

REACH candidate substance (CAS No.)	No substance above 0.1 wt%

Mandatory accessories

RIF-3-BPT/3X21 - Relay base

2900938

https://www.phoenixcontact.com/us/products/2900938



Relay base RIF-3..., for octal relays with 3 changeover contacts, Push-in connection, plug-in option for input/interference suppression modules, for mounting on NS 35/7,5

RIF-3-BSC/3X21 - Relay base

2900936

https://www.phoenixcontact.com/us/products/2900936

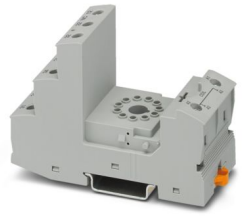

RIF-3... relay base, for octal relay with 3 changeover contacts, screw connection, plug-in option for input/interference suppression modules, for mounting on NS 35/7,5

Phoenix Contact 2024 © - all rights reserved
https://www.phoenixcontact.com

Phoenix Contact USA
586 Fulling Mill Road
Middletown, PA 17057, United States
(+717) 944-1300
info@phoenixcon.com