MIKROELEKTRONIKA D.O.O, Batajnički drum 23, 11000 Belgrade, Serbia
VAT: SR105917343 Registration No. 20490918
Phone: + 381 11 78 57 600 Fax: + 381 11 63 09 644 E-mail: office@mikroe.com
www.mikroe.com

LED Driver 16 Click





PID: MIKROE-5534

LED Driver 16 Click is a compact add-on board that simplifies the control of multiple LEDs. This board features the PCA9745B, an SPI-configurable sixteen-channel constant current LED driver from NXP Semiconductors. Each LED output has an 8-bit resolution (256 steps) fixed-frequency individual PWM controller that operates at 31.25kHz with an adjustable duty cycle from 0 to 100% to allow the LED to be set to a specific brightness value. Powered through a selected mikroBUS™ power rail, either 3.3V or 5V, it provides a maximum output current of 57mA per channel and multiple built-in protection functions that protect the circuit during abnormalities. This Click board™ is optimized for dimming and blinking Red/Green/Blue/Amber (RGBA) LEDs for various consumer amusement applications, LED status signalization, and many more.

LED Driver 16 Click is supported by a mikroSDK compliant library, which includes functions that simplify software development. This Click board™ comes as a fully tested product, ready to be used on a system equipped with the mikroBUS™ socket.

How does it work?

LED Driver 16 Click is based on the PCA9745B, a daisy-chain SPI-compatible 16-channel constant current LED driver from NXP Semiconductors. The PCA9745B provides a maximum output current of 57mA per channel (set through an onboard R6 resistor), making it suitable for dimming and blinking Red/Green/Blue/Amber (RGBA) LEDs. Each of the 16 LED outputs has its 8-bit resolution (256 steps) fixed-frequency individual PWM controller, operating at 31.25 kHz with an adjustable duty cycle. The duty cycle goes from 0% to 100%, allowing LEDs to be set to a specific brightness value; either dim or blink all LEDs with the same value.

Mikroe produces entire development toolchains for all major microcontroller architectures.
Committed to excellency, we are dedicated to helping engineers bring the project development up to speed and achieve outstanding results.

ISO 27001: 2013 certification of informational security management system.
ISO 14001: 2015 certification of environmental management system.
OHSAS 18001: 2008 certification of occupational health and safety management system.

ISO 9001: 2015 certification of quality management system (QMS).

MIKROELEKTRONIKA D.O.O, Batajnički drum 23, 11000 Belgrade, Serbia
VAT: SR105917343 Registration No. 20490918
Phone: + 381 11 78 57 600 Fax: + 381 11 63 09 644 E-mail: office@mikroe.com
www.mikroe.com

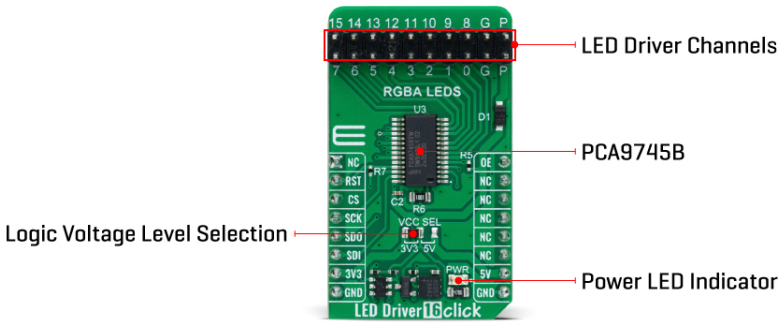

Gradation control for all current sources is achieved through serial interface and 8-bit DACs, allowing users to ramp current automatically, without MCU intervention, and thus adjust brightness levels for each LED current source. There are four selectable gradation control groups, and each group has independently four registers to control ramp-up and ramp-down rate, step time, hold ON/OFF time, and final hold ON output current. Two gradation operation modes are available for each group: single shot mode (output pattern once) and continuous mode (output pattern repeat).

LED Driver 16 Click communicates with MCU through a register-selectable standard SPI interface that enables high clock speed up to 25MHz for optimum performance, supporting the most common SPI mode, SPI Mode 0. In addition to the SPI interface signals, this board uses several other signals from the mikroBUS™ socket. The reset pin routed on the RST pin of the mikroBUS™ socket provides the general reset ability, while the OE pin of the mikroBUS™ socket, hence, offers a switch operation (enabled/disabled) to turn ON/OFF power delivery to the PCA9745B. The OE pin can also be used as an external dimming control signal. In that case, the external clock frequency must be very high, more precisely unseen by the human eye, and the duty cycle value determines the brightness of the LEDs.

This Click board™ can operate with either 3.3V or 5V logic voltage levels selected via the VCC SEL jumper. This way, both 3.3V and 5V capable MCUs can use the communication lines properly. However, the Click board™ comes equipped with a library containing easy-to-use functions and an example code that can be used, as a reference, for further development.

Specifications

Type	LED Drivers
Applications	Can be used for dimming and blinking Red/Green/Blue/Amber (RGBA) LEDs for various consumer amusement applications, LED status signalization, and more
On-board modules	PCA9745B - 16-channel constant current LED driver from NXP Semiconductors
Key Features	Programmable outputs, gradation control for all channels, output channels can sink up to 57mA, output current adjustable through onboard resistor, protection features, SPI

Mikroe produces entire development toolchains for all major microcontroller architectures.
Committed to excellency, we are dedicated to helping engineers bring the project development up to speed and achieve outstanding results.

ISO 27001: 2013 certification of informational security management system.
ISO 14001: 2015 certification of environmental management system.
OHSAS 18001: 2008 certification of occupational health and safety management system.

ISO 9001: 2015 certification of quality management system (QMS).

MIKROELEKTRONIKA D.O.O, Batajnički drum 23, 11000 Belgrade, Serbia
VAT: SR105917343 Registration No. 20490918
Phone: + 381 11 78 57 600 Fax: + 381 11 63 09 644 E-mail: office@mikroe.com
www.mikroe.com

	interface, output enable feature, and more
Interface	SPI
ClickID	Yes
Compatibility	mikroBUS™
Click board size	M (42.9 x 25.4 mm)
Input Voltage	3.3V or 5V

Pinout diagram

This table shows how the pinout on LED Driver 16 Click corresponds to the pinout on the mikroBUS™ socket (the latter shown in the two middle columns).

Notes	Pin	mikroBUS				Pin	Notes
	NC	1	AN	PWM	16	**OE**	Output Enable
Reset	**RST**	2	RST	INT	15	NC	
SPI Chip Select	**CS**	3	CS	RX	14	NC	
SPI Clock	**SCK**	4	SCK	TX	13	NC	
SPI Data OUT	**SDO**	5	MISO	SCL	12	NC	
SPI Data IN	**SDI**	6	MOSI	SDA	11	NC	
Power Supply	**3.3V**	7	3.3V	5V	10	**5V**	Power Supply
Ground	**GND**	8	GND	GND	9	**GND**	Ground

Onboard settings and indicators

Label	Name	Default	Description
LD1	PWR	-	Power LED Indicator
JP1	VCC SEL	Left	Logic Level Voltage Selection 3V3/5V: Left position 3V3, Right position 5V
J1	-	Populated	LED Driver Channels Terminal

LED Driver 16 Click electrical specifications

Description	Min	Typ	Max	Unit
Supply Voltage	3.3	-	5	V
Output Current	-	-	57	mA

Software Support

We provide a library for the LED Driver 16 Click as well as a demo application (example), developed using Mikroe compilers. The demo can run on all the main Mikroe development boards.

Package can be downloaded/installed directly from NECTO Studio Package Manager(recommended), downloaded from our LibStock™ or found on Mikroe github account.

Library Description

Mikroe produces entire development toolchains for all major microcontroller architectures.
Committed to excellency, we are dedicated to helping engineers bring the project development up to speed and achieve outstanding results.

ISO 27001: 2013 certification of informational security management system.
ISO 14001: 2015 certification of environmental management system.
OHSAS 18001: 2008 certification of occupational health and safety management system.

ISO 9001: 2015 certification of quality management system (QMS).

MIKROELEKTRONIKA D.O.O, Batajnički drum 23, 11000 Belgrade, Serbia
VAT: SR105917343 Registration No. 20490918
Phone: + 381 11 78 57 600 Fax: + 381 11 63 09 644 E-mail: office@mikroe.com
www.mikroe.com

This library contains API for LED Driver 16 Click driver.

Key functions

- leddriver16_set_led_state This function sets the output state for the specified LEDs.
- leddriver16_set_led_pwm This function sets the PWM duty cycle for the specified LEDs.
- leddriver16_set_led_iref This function sets the gain settings for output current for the specified LEDs.

Example Description

This example demonstrates the use of LED Driver 16 Click board™ by performing 3 different types of LED control (LED PWM dimming, LED blinking, and LED curtain).

The full application code, and ready to use projects can be installed directly from NECTO Studio Package Manager(recommended), downloaded from our LibStock™ or found on Mikroe github account.

Other Mikroe Libraries used in the example:

- MikroSDK.Board
- MikroSDK.Log
- Click.LEDDriver16

Additional notes and informations

Depending on the development board you are using, you may need USB UART click, USB UART 2 Click or RS232 Click to connect to your PC, for development systems with no UART to USB interface available on the board. UART terminal is available in all Mikroe compilers.

mikroSDK

This Click board™ is supported with mikroSDK - Mikroe Software Development Kit. To ensure proper operation of mikroSDK compliant Click board™ demo applications, mikroSDK should be downloaded from the LibStock and installed for the compiler you are using.

For more information about mikroSDK, visit the official page.

Resources

mikroBUS™

mikroSDK

Click board™ Catalog

Click Boards™

ClickID

Mikroe produces entire development toolchains for all major microcontroller architectures.
Committed to excellency, we are dedicated to helping engineers bring the project development up to speed and achieve outstanding results.

ISOQAR REGISTERED
UKAS MANAGEMENT SYSTEMS
ISO 27001: 2013 certification of informational security management system.
ISO 14001: 2015 certification of environmental management system.
OHSAS 18001: 2008 certification of occupational health and safety management system.
TÜV SÜD ISO 9001
ISO 9001: 2015 certification of quality management system (QMS).

MIKROELEKTRONIKA D.O.O, Batajnički drum 23, 11000 Belgrade, Serbia
VAT: SR105917343 Registration No. 20490918
Phone: + 381 11 78 57 600 Fax: + 381 11 63 09 644 E-mail: office@mikroe.com
www.mikroe.com

Downloads

LED Driver 16 click example on Libstock

PCA9745B datasheet

LED Driver 16 click 2D and 3D files

LED Driver 16 click schematic

Mikroe produces entire development toolchains for all major microcontroller architectures.
Committed to excellency, we are dedicated to helping engineers bring the project development up to speed and achieve outstanding results.

ISO 27001: 2013 certification of informational security management system.
ISO 14001: 2015 certification of environmental management system.
OHSAS 18001: 2008 certification of occupational health and safety management system.

ISO 9001: 2015 certification of quality management system (QMS).