# Product data sheet

Specifications



## Mini circuit breaker, QO, 25A, 1 pole, 120/240VAC, 65kA, bolt on

QHB125

**Product availability: Stock - Normally stocked in distribution facility**

## Main

| | |
|---|---|
| **Product** | Miniature circuit-breaker |
| **Range** | QO |
| **Current Rating** | 25 A |
| **Voltage Rating** | 120/240 V AC<br>120 V AC |
| **Mounting Type** | Bolt-on |
| **Number of Poles** | 1P |
| **Circuit Breaker Type** | Standard |
| **Ratings** | HACR rated |
| **Electrical Connection** | Pressure plate |

## Complementary

| | |
|---|---|
| **Interrupt Rating** | 65 kA 120/240 V AC<br>65 kA 120 V AC |
| **Number of Panel Spaces** | 1 |
| **Wire Size** | AWG 14...AWG 8 copper or aluminium |
| **Tightening Torque** | 40.7 lbf.in (4.6 N.m) |
| **Height** | 3.0 in (76 mm) |
| **Width** | 0.7 in (19 mm) |
| **Depth** | 2.9 in (74 mm) |
| **Net Weight** | 0.300 lb(US) (0.136 kg) |

## Environment

| | |
|---|---|
| **Certifications** | UL Listed<br>CSA |
| **Ambient Rating** | 104 °F (40 °C) |

## Ordering and shipping details

| | |
|---|---|
| **Category** | US10DE200015 |
| **Discount Schedule** | 0DE2 |
| **GTIN** | 785901362319 |
| **Returnability** | Yes |
| **Country of origin** | MX |

Price is “List Price” and may be subject to a trade discount – check with your local distributor or retailer for actual price.

Disclaimer: This documentation is not intended as a substitute for and is not to be used for determining suitability or reliability of these products for specific user applications

## Packing Units

| | |
|---|---|
| **Unit Type of Package 1** | PCE |
| **Nbr. of units in pkg.** | 1 |
| **Package 1 Height** | 0.700 in (1.778 cm) |
| **Package 1 Width** | 3.300 in (8.382 cm) |
| **Package 1 Length** | 3.300 in (8.382 cm) |
| **Package weight(Lbs)** | 4.800 oz (136.078 g) |

## Contractual warranty

| | |
|---|---|
| **Warranty** | 18 months |

## Environmental Data

Schneider Electric aims to achieve Net Zero status by 2050 through supply chain partnerships, lower impact materials, and circularity via our ongoing “Use Better, Use Longer, Use Again” campaign to extend product lifetimes and recyclability.

Environmental Data explained >

How we assess product sustainability >

### Use Better

#### Materials and Substances

| | |
|---|---|
| Packaging made with recycled cardboard | **No** |
| Packaging without single use plastic | **Yes** |
| EU RoHS Directive | **Compliant** |
| SCIP Number | **Af42fb01-813d-40c0-ae28-b8b3299dbc99** |
| REACh Regulation | **REACh Declaration** |

### Use Again

#### Repack and remanufacture

| | |
|---|---|
| Take-back | **No** |

Technical Illustration

## Dimensions

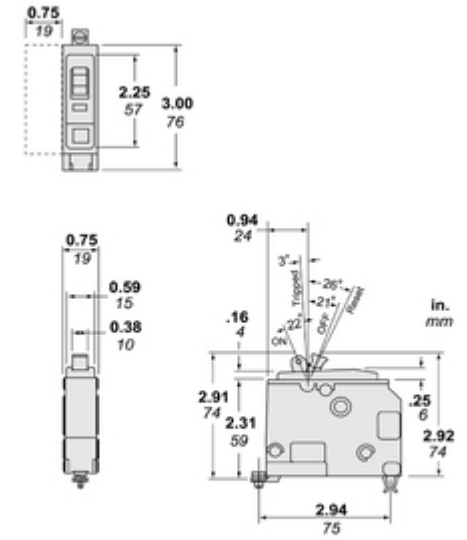


Dimensions are approximate. Refer to technical documentation for additional detail.