# TTC-6-MOV-C-120AC-UT-I - Surge protection device

2906840

https://www.phoenixcontact.com/us/products/2906840

Please be informed that the data shown in this PDF document is generated from our online catalog. Please find the complete data in the user documentation. Our general terms of use for downloads are valid.



Medium surge protection with integrated status indicator for a signal wire with grounded reference potential.

## Your advantages

- Space-saving and cost-saving with a narrow overall width of just 6 mm
- Continuous monitoring of protective devices, plus mechanical status indicator with optional remote signaling
- Finding the right product for all possible requirements in MCR applications is easy, thanks to the complete range of products with customized features

## Commercial data

| | |
|---|---|
| Item number | 2906840 |
| Packing unit | 1 pc |
| Minimum order quantity | 1 pc |
| Sales key | CL23 |
| Product key | CL2264 |
| Catalog page | Page 150 (C-4-2019) |
| GTIN | 4055626136967 |
| Weight per piece (including packing) | 30 g |
| Weight per piece (excluding packing) | 13.1 g |
| Customs tariff number | 85363010 |
| Country of origin | DE |

## Technical data

### Product properties

| | |
|---|---|
| Product type | Surge protection for MCR technology |
| Product family | TERMITRAB complete |
| IEC test classification | C1 |
| | C2 |
| | C3 |
| Type | DIN rail module, one-piece |
| Surge protection fault message | optical |

Insulation characteristics

| | |
|---|---|
| Overvoltage category | III |
| Pollution degree | 2 |

### Electrical properties

| | |
|---|---|
| Nominal voltage $U_N$ | 120 V AC |

### Connection data

| | |
|---|---|
| Connection method | Screw connection |
| Screw thread | M3 |
| Tightening torque | 0.5 Nm ... 0.6 Nm |
| Conductor cross section flexible | 0.2 mm² ... 2.5 mm² |
| Conductor cross section rigid | 0.2 mm² ... 4 mm² |
| Conductor cross section AWG | 24 ... 12 |

### Dimensions

| | |
|---|---|
| Dimensional drawing | 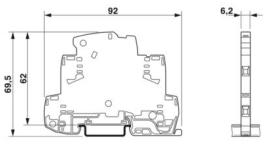  |
| Width | 6.2 mm |
| Height | 92 mm |
| Depth | 69.5 mm (incl. DIN rail 7.5 mm) |

### Material specifications

| | |
|---|---|
| Color | gray (RAL 7042) |
| Flammability rating according to UL 94 | V-0 |
| Insulating material | PBT |
| Housing material | PBT |

### Mechanical properties

Mechanical data

| | |
|---|---|
| Open side panel | Yes |

## Protective circuit

| | |
|---|---|
| Direction of action | Line-Earth Ground |
| Maximum continuous voltage $U_C$ | 150 V DC |
| | 150 V AC |
| Rated current | 10 A (60 °C) |
| Operating effective current $I_C$ at $U_C$ | ≤ 100 µA |
| Residual current $I_{PE}$ | ≤ 100 µA |
| Nominal discharge current $I_n$ (8/20) µs (line-ground) | 2.5 kA |
| Voltage protection level $U_p$ (line-earth) | ≤ 200 V (C1 - 800 A) |
| | ≤ 500 V (C2 - 5 kV) |
| | ≤ 380 V (C3 - 25 A) |
| | ≤ 380 V (C3 - 35 A) |
| Response time $t_A$ (line-earth) | ≤ 25 ns |
| Input attenuation aE, asym. | typ. 0.3 dB (≤ 300 kHz / 150 Ω) |
| Cut-off frequency fg (3 dB), asym. (PE) in 150 Ω system | typ. 1 MHz |
| Capacity (Core-Earth) | 5 nF |
| Resistance per path | ≤ 100 mΩ |
| Surge protection fault message | optical |
| Impulse durability (line-earth) | C1 - 800 A |
| | C2 - 2.5 kA |
| | C3 - 35 A |

## Environmental and real-life conditions

### Ambient conditions

| | |
|---|---|
| Degree of protection | IP20 (with end cover) |
| Ambient temperature (operation) | -40 °C ... 85 °C |
| Ambient temperature (storage/transport) | -40 °C ... 85 °C |
| Altitude | ≤ 2000 m (amsl) |
| Permissible humidity (operation) | 5 % ... 95 % |

## Standards and regulations

| | |
|---|---|
| Standards/specifications | IEC 61643-21 |
| Note | 2000 + corrigendum 2001 + A1:2008, modified + A2:2012 |

### EN 61643-21

| | |
|---|---|
| Standards/specifications | EN 61643-21 |
| Note | 2001 + A1:2009 + A2:2013 |

## Mounting

| | |
|---|---|
| Mounting type | DIN rail: 35 mm |

## Drawings

Circuit diagram

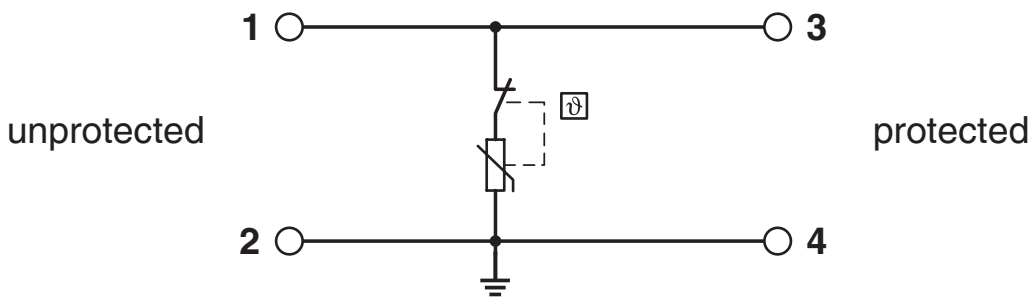


Dimensional drawing

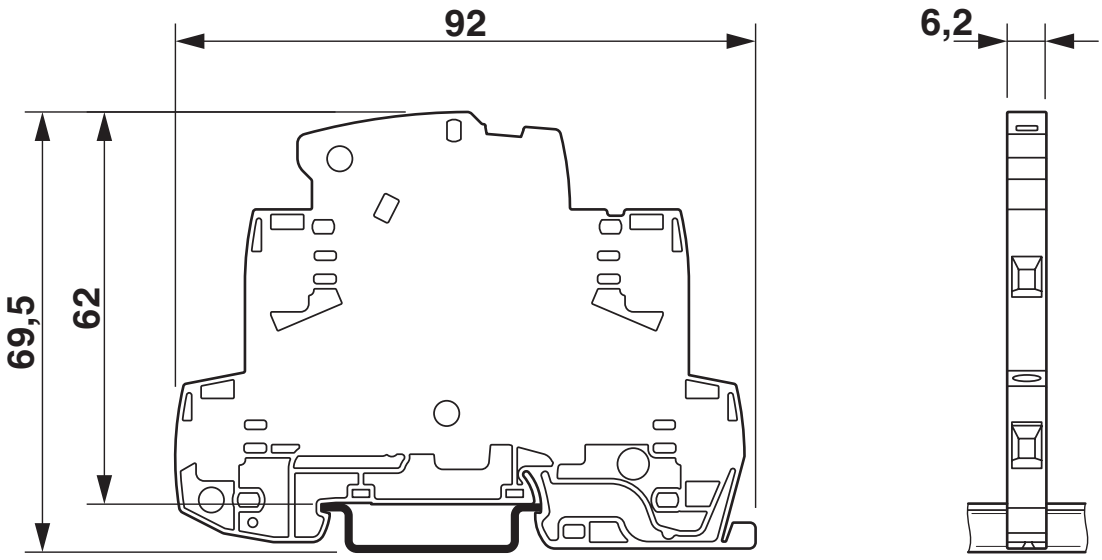

Diagram

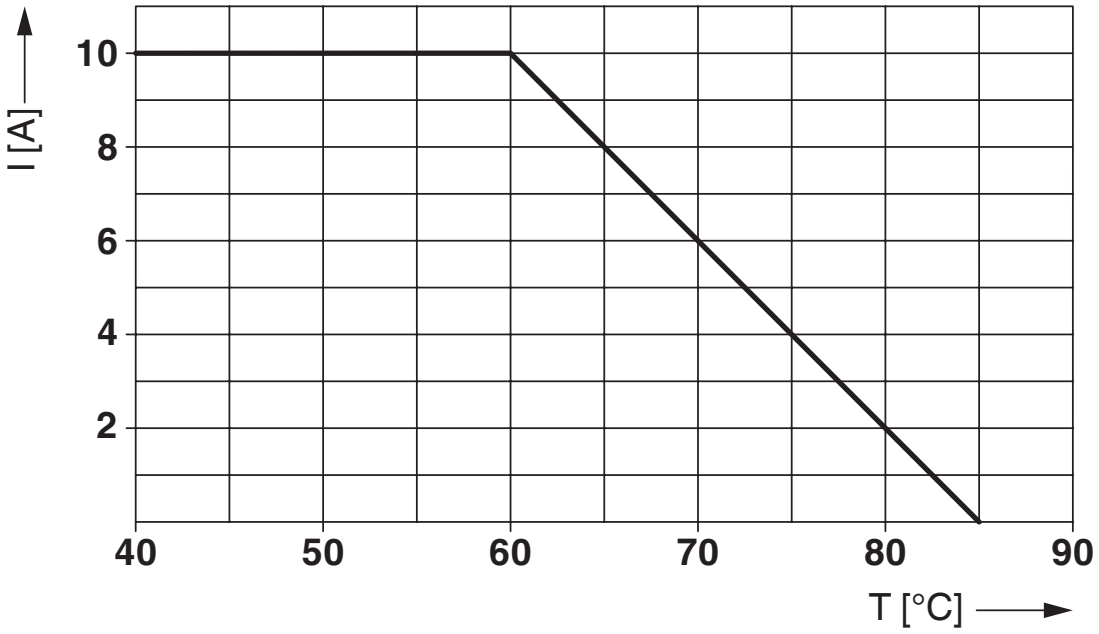

## Approvals

To download certificates, visit the product detail page: https://www.phoenixcontact.com/us/products/2906840

**CSA**
Approval ID: 70136717

**DNV GL**
Approval ID: TAE000027G

**UL Listed**
Approval ID: FILE E 138168

**CSAus**
Approval ID: 70136717

**UAE-RoHS**
Approval ID: 22-06-16192

**Functional Safety**
Approval ID: 16-06-072 R024 V2R0

**cCSAus**

## Classifications

### ECLASS

| | |
|---|---|
| ECLASS-11.0 | 27130807 |
| ECLASS-13.0 | 27171501 |

### ETIM

| | |
|---|---|
| ETIM 9.0 | EC001625 |

### UNSPSC

| | |
|---|---|
| UNSPSC 21.0 | 39121600 |

## Environmental product compliance

EU RoHS

| | |
|---|---|
| Fulfills EU RoHS substance requirements | Yes, No exemptions |

China RoHS

| | |
|---|---|
| Environment friendly use period (EFUP) | EFUP-E |
| | No hazardous substances above the limits |

EU REACH SVHC

| | |
|---|---|
| REACH candidate substance (CAS No.) | No substance above 0.1 wt% |

## Accessories

### ZBF 6 CUS - Zack Marker strip, flat

0825027

https://www.phoenixcontact.com/us/products/0825027



Zack Marker strip, flat, Strip, can be ordered: Strip, white, labeled according to customer specifications, mounting type: snap into flat marker groove, for terminal block width: 6.2 mm, lettering field size: 5.15 x 6.15 mm, Number of individual labels: 10

### ZBF 6:UNBEDRUCKT - Zack Marker strip, flat

0808710

https://www.phoenixcontact.com/us/products/0808710



Zack Marker strip, flat, Strip, white, unlabeled, can be labeled with: PLOTMARK, CMS-P1-PLOTTER, mounting type: snapped, for terminal block width: 6.2 mm, lettering field size: 5.15 x 6.15 mm, Number of individual labels: 10

## ZBF 6/WH-100:UNBEDRUCKT - Zack Marker strip, flat

0808736

https://www.phoenixcontact.com/us/products/0808736



Zack Marker strip, flat, Strip, white, unlabeled, can be labeled with: PLOTMARK, CMS-P1-PLOTTER, mounting type: snapped, for terminal block width: 6.2 mm, lettering field size: 5.15 x 6.15 mm, Number of individual labels: 1000

## ZBF 6,QR:FORTL.ZAHLEN - Zack Marker strip, flat

0808765

https://www.phoenixcontact.com/us/products/0808765




Zack Marker strip, flat, Strip, white, labeled, Printed vertically: consecutive numbers 1 ... 10, 11 ... 20, etc. up to 91 ... 100, mounting type: snapped, for terminal block width: 6.2 mm, lettering field size: 5.15 x 6.15 mm, Number of individual labels: 10

## CLIPFIX 35-5 - End bracket

3022276

https://www.phoenixcontact.com/us/products/3022276



Quick mounting end clamp for NS 35/7,5 DIN rail or NS 35/15 DIN rail, with marking option, with parking option for FBS...5, FBS...6, KSS 5, KSS 6, width: 5. 15 mm, color: gray

## TTC-6-FMRS-UT - Remote signaling set

2907810

https://www.phoenixcontact.com/us/products/2907810




Module set for the optical monitoring and floating remote signaling of adjacent surge protective devices in the TERMITRAB complete or CLIXTRAB product family. Suitable for directly grounded DIN rails.

## TTC-6-LCP - Cover

2908729

https://www.phoenixcontact.com/us/products/2908729



End cover for terminating a row of TERMITRAB complete TTC-6... terminal blocks

## SSA 3-6 - Shield connection

2839295

https://www.phoenixcontact.com/us/products/2839295



Shield fast connection for 3 ... 6 mm cable diameter. Potential connecting cable: 200 mm, 1 $mm^2$, color: black

## SSA 5-10 - Shield connection

2839512

https://www.phoenixcontact.com/us/products/2839512



Shield fast connection for 5 ... 10 mm cable diameter. Potential connecting cable: 200 mm, 1 $mm^2$, color: black

## X-PEN 0,35 - Marker pen

0811228

https://www.phoenixcontact.com/us/products/0811228



Marker pen without ink cartridge, for manual labeling of markers, labeling extremely wipe-proof, line thickness 0.35 mm

## SZS 0,6X3,5 VDE - Screwdriver

1212602

https://www.phoenixcontact.com/us/products/1212602



Screwdriver, slot-headed, VDE insulated, size: 0.6 x 3.5 x 100 mm, 2-component grip, with non-slip grip

Phoenix Contact 2024 © - all rights reserved
https://www.phoenixcontact.com

Phoenix Contact USA
586 Fulling Mill Road
Middletown, PA 17057, United States
(+717) 944-1300
info@phoenixcon.com