NBC-M12FSD/ 2,0-93C/R4AC - Network cable

1038740

https://www.phoenixcontact.com/pc/products/1038740

Please be informed that the data shown in this PDF document is generated from our online catalog. Please find the complete data in the user documentation. Our general terms of use for downloads are valid.



Network cable, PROFINET CAT5 (100 Mbps), EtherCAT® CAT5 (100 Mbps), 4-position, PUR/FRNC halogen-free, green RAL 6018, shielded (Aluminum-coated foil, tinned copper braided shield), Advanced Shielding Technology, Socket straight M12, coding: D / IP67, on Plug straight RJ45 / IP20, cable length: 2 m

Commercial data

Item number	1038740
Packing unit	1 pc
Minimum order quantity	1 pc
Note	Made to order (non-returnable)
Product key	BF1CJN
GTIN	4055626592749
Weight per piece (including packing)	149.44 g
Weight per piece (excluding packing)	149.44 g
Customs tariff number	85444290
Country of origin	PL

Technical data

Notes

General	This product corresponds to the PROFINET Cabling and Interconnection Technology Guideline for PROFINET regulations, version 2.00, order no: 2.252, Chapter 10.1 Cord Sets for Balanced Cabling
General	Further products with variable cable type and variable cable length can be found in the accessories section

Product properties

Product type	Data cable preassembled
Application	Standard
Sensor type	PROFINET
Number of positions	4
No. of cable outlets	1
Shielded	yes
Coding	D

Insulation characteristics

Overvoltage category	I
Degree of pollution	2

Interfaces

Bus system	PROFINET
Signal type/category	PROFINET CAT5 (IEC 11801), 100 Mbps
	EtherCAT® CAT5 (IEC 11801), 100 Mbps

Signaling

Status display	No
Status display present	No

Electrical properties

Nominal voltage U_N	48 V AC
	60 V DC
Nominal current I_N	1 A
Transmission medium	Copper
Transmission characteristics (category)	CAT5 (IEC 11801:2002)

Material specifications

Flammability rating according to UL 94	V2

Connector

Connection 1

Type	Socket straight M12 / IP67

Number of positions	4
Coding type	D (Data)
Handle color	black
Material	CuSn (Contact)
	Ni/Au (Contact surface)
	PA (Contact carriers)
	TPU, hardly inflammable, self-extinguishing (Grip)
	Zinc die-cast, nickel-plated (Screw connection)
	FKM (Seal)
Insertion/withdrawal cycles	≥ 100
Insulation resistance	≥ 100 MΩ
Tightening torque	0.4 Nm
Degree of protection	IP67
Ambient temperature (operation)	-25 °C ... 90 °C

Connection 2

Type	Plug straight RJ45 / IP20
Number of positions	4 (8)
Handle color	black
Material	CuSn (Contact)
	Ni/Au (Contact surface)
	PA (Contact carriers)
	PA (Housing)
Insertion/withdrawal cycles	≥ 750
Degree of protection	IP20
Ambient temperature (operation)	-25 °C ... 80 °C

Cable/line

Cable length	2 m

PROFINET drag chain CAT5 [93C]

Dimensional drawing	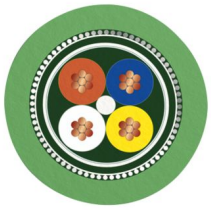
Cable weight	61 kg/km
Number of positions	4
Shielded	yes
Cable type	PROFINET drag chain CAT5 [93C]
Conductor structure	1x4xAWG22/7, SF/TQ
Signal runtime	5.3 ns/m

Signal speed	0.66 c
Conductor structure signal line	7x 0.25 mm
AWG signal line	22
Conductor cross section	4x 0.34 mm²
Wire diameter incl. insulation	1.5 mm
External cable diameter	6.50 mm ±0.2 mm
Outer sheath, material	PUR
External sheath, color	green RAL 6018
Conductor material	Tin-plated Cu litz wires
Material wire insulation	PE
Single wire, color	white, yellow, blue, orange
Thickness, outer sheath	approx. 0.90 mm
Overall twist	Star quad
Optical shield covering	85 %
Insulation resistance	≥ 500 MΩ*km
Coupling resistance	≤ 20.00 mΩ/m (at 10 MHz)
Loop resistance	≤ 120.00 Ω/km
Wave impedance	100 Ω ±15 Ω (at 1 ... 100 MHz)
Nominal voltage, cable	600 V (UL rating)
Test voltage Core/Core	2000 V (50 Hz, 1 min.)
Test voltage Core/Shield	2000.00 V (50 Hz, 1 min.)
Minimum bending radius, fixed installation	5 x D
Minimum bending radius, flexible installation	7.5 x D
Smallest bending radius, fixed installation	33 mm
Smallest bending radius, movable installation	49 mm
Max. bending cycles	3000000
Tensile strength	≤ 150 N
Torsion force	± 30 °/m
Near end crosstalk attenuation (NEXT)	80 dB (with 1 MHz)
	76 dB (at 4 MHz)
	70 dB (at 10 MHz)
	65 dB (at 16 MHz)
	63 dB (at 20 MHz)
	60 dB (at 31.25 MHz)
	55 dB (at 62.5 MHz)
	50 dB (at 100 MHz)
Shield attenuation	2.1 dB (with 1 MHz)
	4 dB (at 4 MHz)
	6.3 dB (at 10 MHz)
	8 dB (at 16 MHz)
	9 dB (at 20 MHz)
	11.4 dB (at 31.25 MHz)
	16.5 dB (at 62.5 MHz)
	21.3 dB (at 100 MHz)

Halogen-free	yes
Flame resistance	according to IEC 60332-1-2
Resistance to oil	in accordance with DIN EN 60811-2-1
Other resistance	UV resistant
Special properties	Electrical properties in accordance with EN 50288-2-2
Ambient temperature (operation)	-40 °C ... 70 °C (cable, fixed installation)
	-40 °C ... 70 °C (Cable, flexible installation)
Ambient temperature (installation)	-20 °C ... 60 °C

Environmental and real-life conditions

Ambient conditions

Degree of protection	IP65 (M12 connector)
	IP67 (M12 connector)
	IP20 (RJ45 connector)

Standards and regulations

M12

Standard designation	M12 connector
Standards/specifications	IEC 61076-2-101

Drawings

Dimensional drawing

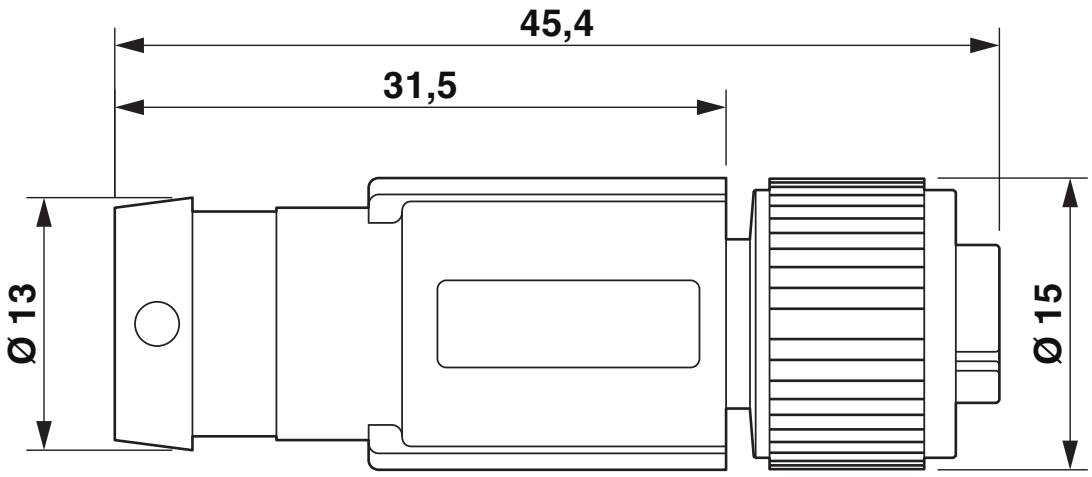

M12 x 1 socket, straight, shielded

Dimensional drawing

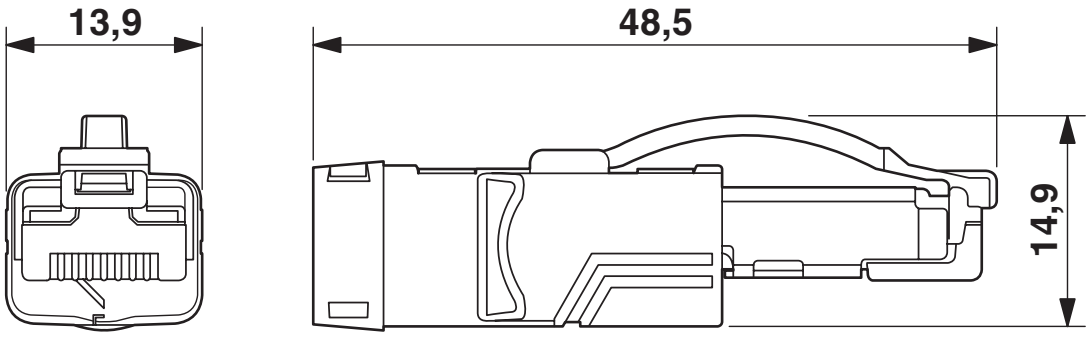

RJ45 connector, IP20

Schematic diagram

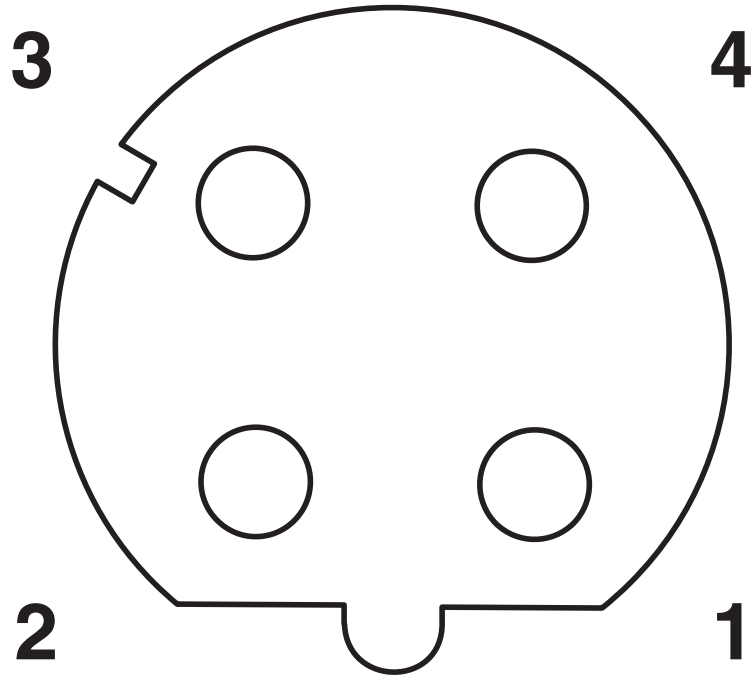

Pin assignment M12 socket, 4-pos., D-coded, female side

Circuit diagram

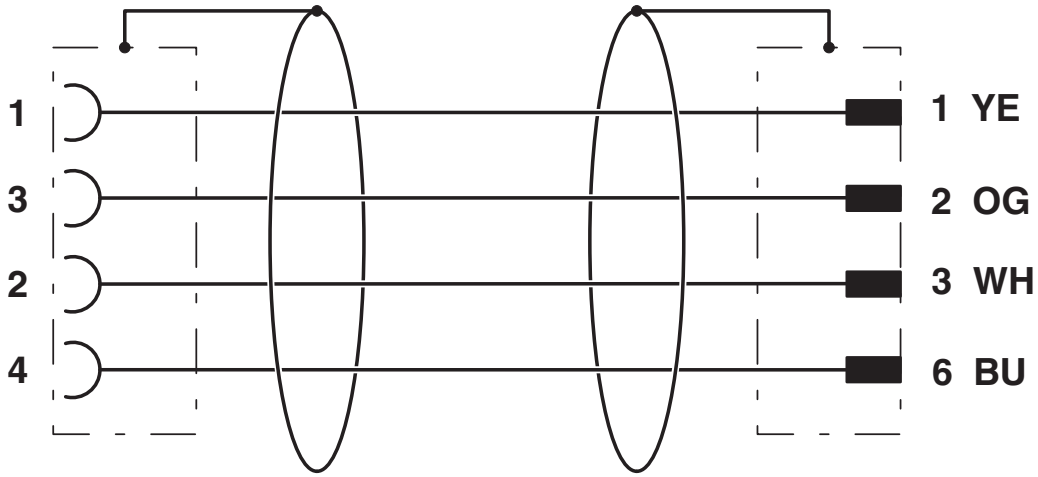

Schematic diagram

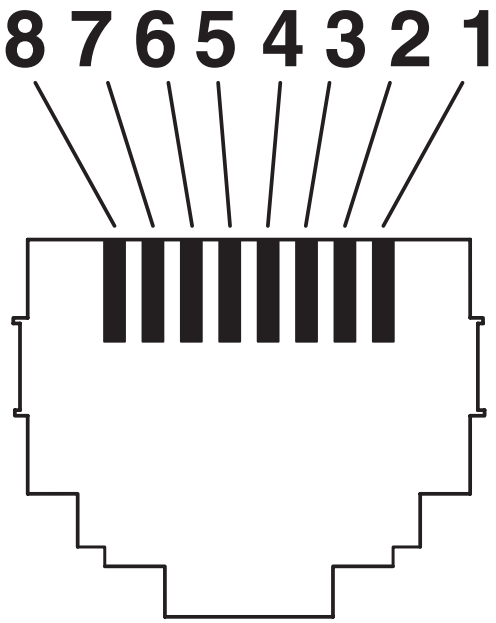

Connector pin assignment plug RJ45

Approvals

To download certificates, visit the product detail page: https://www.phoenixcontact.com/pc/products/1038740

cULus Listed
Approval ID: NBC-M12MSD Series

	Nominal voltage U_N	Nominal current I_N	Cross section AWG	Cross section mm^2
	60 V	0.5 A	-	-

Classifications

ECLASS

ECLASS-11.0	27060307
ECLASS-12.0	27060307
ECLASS-13.0	27060307

ETIM

ETIM 9.0	EC001855

UNSPSC

UNSPSC 21.0	26121600

Environmental product compliance

EU RoHS

Fulfills EU RoHS substance requirements	Yes, No exemptions

China RoHS

Environment friendly use period (EFUP)	EFUP-E
	No hazardous substances above the limits

EU REACH SVHC

REACH candidate substance (CAS No.)	No substance above 0.1 wt%

Accessories

NBC-M12MSD-R4AC-PN/.../... - Network cable

1408639

https://www.phoenixcontact.com/pc/products/1408639



Network cable, PROFINET CAT5 (100 Mbps), EtherCAT® CAT5 (100 Mbps), 4-position, Plug straight M12 SPEEDCON, coding: D / IP67, on Plug straight RJ45 / IP20, cable length: Free input (0.2 ... 40.0 m)

NBC-MSD-R4ACR SCO-PN/.../... - Network cable

1408638

https://www.phoenixcontact.com/pc/products/1408638



Network cable, PROFINET CAT5 (100 Mbps), EtherCAT® CAT5 (100 Mbps), 4-position, Plug straight M12 SPEEDCON, coding: D / IP67, on Plug angled RJ45 / IP20, cable length: Free input (0.2 ... 40.0 m)

NBC-M12MRD-R4AC-PN/.../... - Network cable

1408632

https://www.phoenixcontact.com/pc/products/1408632



Network cable, PROFINET CAT5 (100 Mbps), EtherCAT® CAT5 (100 Mbps), 4-position, Plug angled M12 SPEEDCON, coding: D / IP67, on Plug straight RJ45 / IP20, cable length: Free input (0.2 ... 40.0 m)

NBC-MRD-R4ACR SCO-PN/.../... - Network cable

1408631

https://www.phoenixcontact.com/pc/products/1408631



Network cable, PROFINET CAT5 (100 Mbps), EtherCAT® CAT5 (100 Mbps), 4-position, Plug angled M12 SPEEDCON, coding: D / IP67, on Plug angled RJ45 / IP20, cable length: Free input (0.2 ... 40.0 m)

NBC-FSD-R4AC SCO-PN/.../... - Network cable

1408622

https://www.phoenixcontact.com/pc/products/1408622



Network cable, PROFINET CAT5 (100 Mbps), EtherCAT® CAT5 (100 Mbps), 4-position, Socket straight M12 SPEEDCON, coding: D / IP67, on Plug straight RJ45 / IP20, cable length: Free input (0.2 ... 40.0 m)

NBC-FSD-R4ACR SCO-PN/.../... - Network cable

1408621

https://www.phoenixcontact.com/pc/products/1408621



Network cable, PROFINET CAT5 (100 Mbps), EtherCAT® CAT5 (100 Mbps), 4-position, Socket straight M12 SPEEDCON, coding: D / IP67, on Plug angled RJ45 / IP20, cable length: Free input (0.2 ... 40.0 m)

NBC-FRD-R4AC SCO-PN/.../... - Network cable

1408613

https://www.phoenixcontact.com/pc/products/1408613



Network cable, PROFINET CAT5 (100 Mbps), EtherCAT® CAT5 (100 Mbps), 4-position, Socket angled M12 SPEEDCON, coding: D / IP67, on Plug straight RJ45 / IP20, cable length: Free input (0.2 ... 40.0 m)

NBC-FRD-R4ACR SCO-PN/.../... - Network cable

1408612

https://www.phoenixcontact.com/pc/products/1408612



Network cable, PROFINET CAT5 (100 Mbps), EtherCAT® CAT5 (100 Mbps), 4-position, Socket angled M12 SPEEDCON, coding: D / IP67, on Plug angled RJ45 / IP20, cable length: Free input (0.2 ... 40.0 m)

PROT-M12 MS-PA-CHAIN - Screw plug

1430899

https://www.phoenixcontact.com/pc/products/1430899

M12 sealing cap with fixing band, for sensor cables, for free M12 sockets



SAC-M12-EXCLIP-F - Locking clip

1558991

https://www.phoenixcontact.com/pc/products/1558991

Locking clip for the socket side of sensor/actuator cables with M12 connector and M12 connectors for assembly, for knurl diameter: 15 mm or for Allen key with a wrench size of 14 mm, prevents the disconnection of plug-in connections without tools



TSD 04 SAC - Torque screwdriver

1208429

https://www.phoenixcontact.com/pc/products/1208429



Torque screwdriver, with preset torque of 0.4 Nm and 4 mm hexagonal drive for M12 connectors

TSD-M 1,2NM - Torque screwdriver

1212224

https://www.phoenixcontact.com/pc/products/1212224



Torque screw driver, accuracy as per EN ISO 6789 standard, adjustable from 0. 3 - 1.2 Nm

TSD-M SAC-BIT ADAPTER - Adapter insert

1212600

https://www.phoenixcontact.com/pc/products/1212600



Adapter bit for TSD-M...torque tools, E6.3-1/4" drive with 4 mm hexagon to accommodate SAC bits

SAC BIT M12-D15 - Tool

1208432

https://www.phoenixcontact.com/pc/products/1208432



Nut for assembling sensor/actuator cables with M12 connector and M12 connectors for assembly, with a knurl diameter of 15 mm, for 4 mm hexagonal drive

Phoenix Contact 2024 © - all rights reserved
https://www.phoenixcontact.com

PHOENIX CONTACT GmbH & Co. KG
Flachsmarktstraße 8
D-32825 Blomberg
+49 (0) 5235-3 00
info@phoenixcontact.com