High-Voltage Trench MOS Barrier Schottky Rectifier

Ultra Low V_F = 0.55 V at I_F = 5 A

TMBS®

TO-220AB

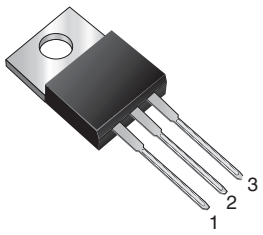

TO-262AA

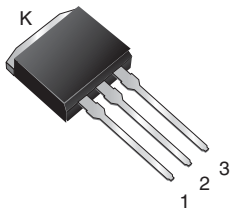

V20150S

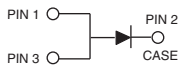

VI20150S

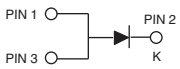

PRIMARY CHARACTERISTICS	
$I_{F(AV)}$	20 A
V_{RRM}	150 V
I_{FSM}	160 A
V_F at I_F = 20 A	0.75 V
T_J max.	150 °C
Package	TO-220AB, TO-262AA
Diode variations	Single

FEATURES

- Trench MOS Schottky technology
- Low forward voltage drop, low power losses
- High efficiency operation
- Solder bath temperature 275 °C max. 10 s, per JESD 22-B106
- Material categorization: for definitions of compliance please see www.vishay.com/doc?99912

RoHS COMPLIANT
HALOGEN FREE

TYPICAL APPLICATIONS

For use in high frequency DC/DC converters, switching power supplies, freewheeling diodes, OR-ing diode, and reserve battery protection.

MECHANICAL DATA

Case: TO-220AB and TO-262AA
Molding compound meets UL 94 V-0 flammability rating Base P/N-M3 - halogen-free, RoHS-compliant, and commercial grade

Terminals: matte tin plated leads, solderable per J-STD-002 and JESD 22-B102
M3 suffix meets JESD 201 class 1A whisker test

Polarity: as marked

Mounting Torque: 10 in-lbs maximum

MAXIMUM RATINGS (T_A = 25 °C unless otherwise noted)

PARAMETER	SYMBOL	V20150S	VI20150S	UNIT
Maximum repetitive peak reverse voltage	V_{RRM}	150		V
Maximum average forward rectified current (fig. 1)	$I_{F(AV)}$	20		A
Peak forward surge current 8.3 ms single half sine-wave superimposed on rated load	I_{FSM}	160		A
Voltage rate of change (rated V_R)	dV/dt	10 000		V/µs
Operating junction and storage temperature range	T_J, T_{STG}	-55 to +150		°C

For technical questions within your region: DiodesAmericas@vishay.com, DiodesAsia@vishay.com, DiodesEurope@vishay.com
THIS DOCUMENT IS SUBJECT TO CHANGE WITHOUT NOTICE. THE PRODUCTS DESCRIBED HEREIN AND THIS DOCUMENT ARE SUBJECT TO SPECIFIC DISCLAIMERS, SET FORTH AT www.vishay.com/doc?91000

ELECTRICAL CHARACTERISTICS (T_A = 25 °C unless otherwise noted)						
PARAMETER	**TEST CONDITIONS**		**SYMBOL**	**TYP.**	**MAX.**	**UNIT**
Instantaneous forward voltage	I_F = 5 A	T_A = 25 °C	V_F (1)	0.69	-	V
	I_F = 10 A			0.84	-	
	I_F = 20 A			1.15	1.43	
	I_F = 5 A	T_A = 125 °C		0.55	-	
	I_F = 10 A			0.64	-	
	I_F = 20 A			0.75	0.82	
Reverse current	V_R = 100 V	T_A = 25 °C	I_R (2)	2	-	µA
		T_A = 125 °C		2.5	-	mA
	V_R = 150 V	T_A = 25 °C		-	250	µA
		T_A = 125 °C		5	25	mA

Notes

(1) Pulse test: 300 µs pulse width, 1 % duty cycle

(2) Pulse test: Pulse width ≤ 40 ms

THERMAL CHARACTERISTICS (T_A = 25 °C unless otherwise noted)				
PARAMETER	**SYMBOL**	**V20150S**	**VI20150S**	**UNIT**
Typical thermal resistance	$R_{\theta JC}$	2.0		°C/W

ORDERING INFORMATION (Example)					
PACKAGE	**PREFERRED P/N**	**UNIT WEIGHT (g)**	**PACKAGE CODE**	**BASE QUANTITY**	**DELIVERY MODE**
TO-220AB	V20150S-M3/4W	1.88	4W	50/tube	Tube
TO-262AA	VI20150S-M3/4W	1.45	4W	50/tube	Tube

For technical questions within your region: DiodesAmericas@vishay.com, DiodesAsia@vishay.com, DiodesEurope@vishay.com

THIS DOCUMENT IS SUBJECT TO CHANGE WITHOUT NOTICE. THE PRODUCTS DESCRIBED HEREIN AND THIS DOCUMENT ARE SUBJECT TO SPECIFIC DISCLAIMERS, SET FORTH AT www.vishay.com/doc?91000

RATINGS AND CHARACTERISTICS CURVES (T_A = 25 °C unless otherwise noted)

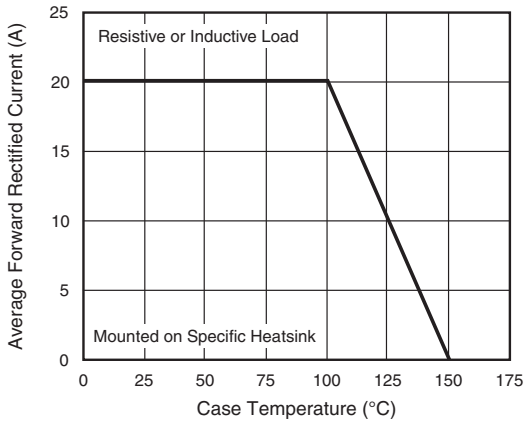

Fig. 1 - Maximum Forward Current Derating Curve

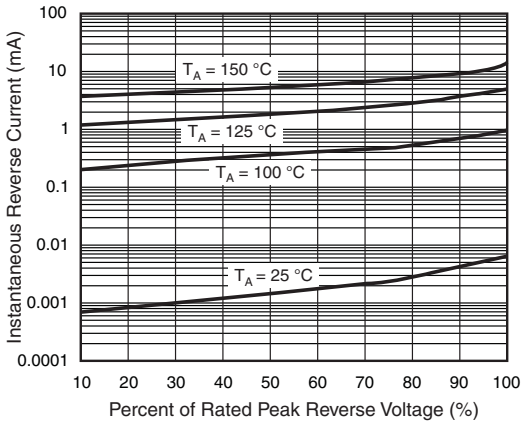

Fig. 4 - Typical Reverse Characteristics

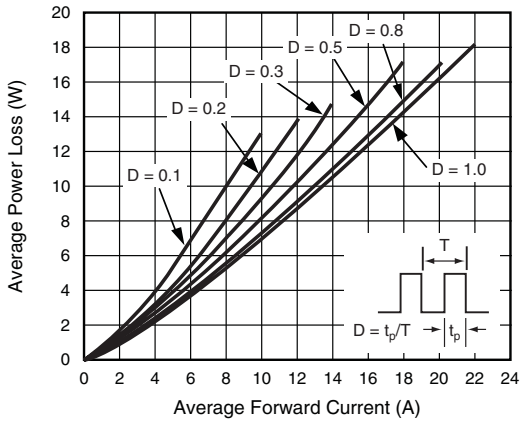

Fig. 2 - Forward Power Dissipation Characteristics

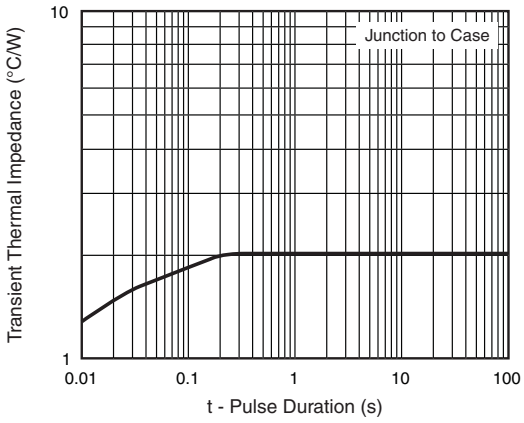

Fig. 5 - Typical Transient Thermal Impedance

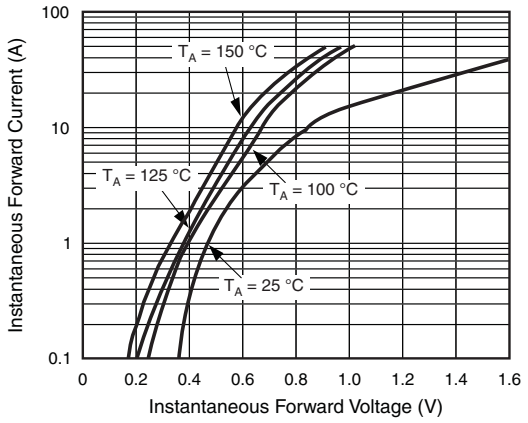

Fig. 3 - Typical Instantaneous Forward Characteristics

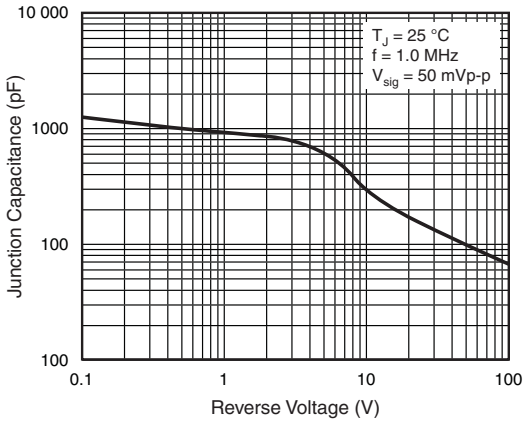

Fig. 6 - Typical Junction Capacitance

For technical questions within your region: DiodesAmericas@vishay.com, DiodesAsia@vishay.com, DiodesEurope@vishay.com
THIS DOCUMENT IS SUBJECT TO CHANGE WITHOUT NOTICE. THE PRODUCTS DESCRIBED HEREIN AND THIS DOCUMENT ARE SUBJECT TO SPECIFIC DISCLAIMERS, SET FORTH AT www.vishay.com/doc?91000

PACKAGE OUTLINE DIMENSIONS in inches (millimeters)

TO-220AB

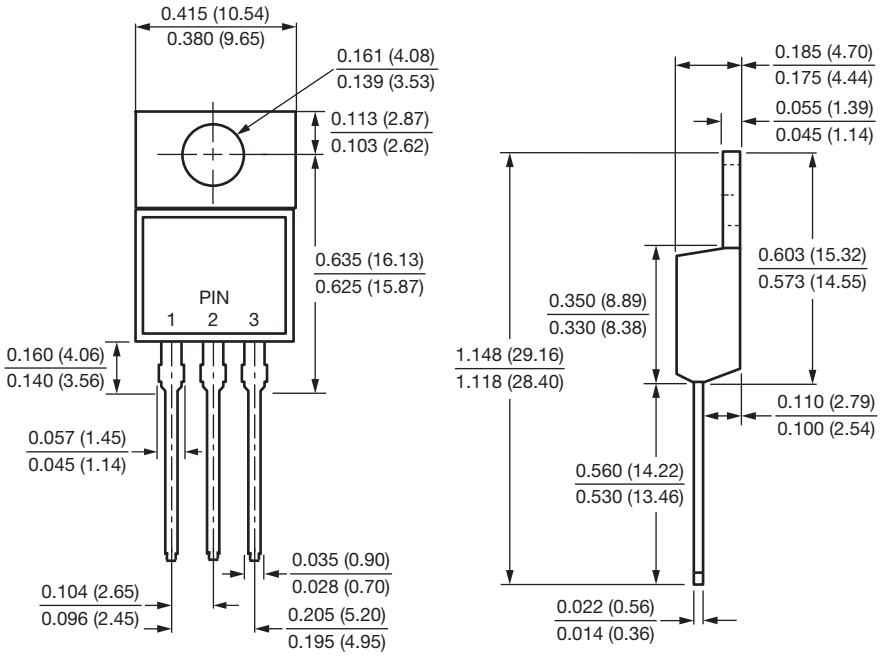

TO-262AA

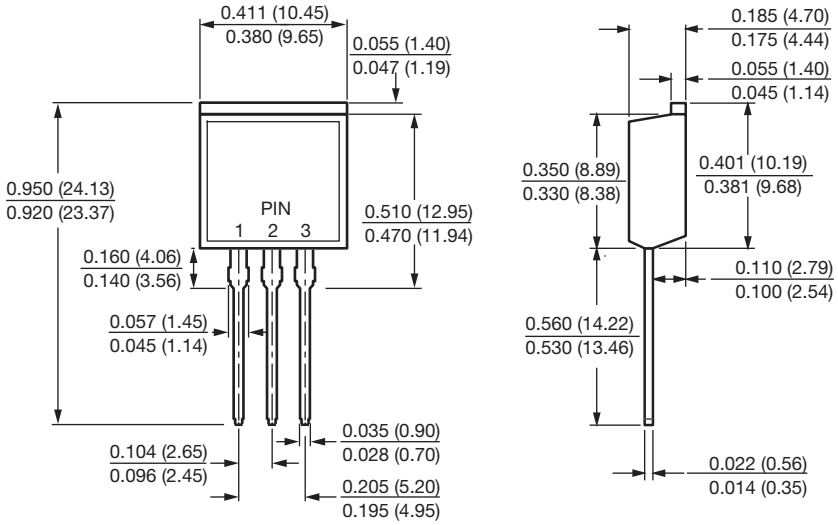

For technical questions within your region: DiodesAmericas@vishay.com, DiodesAsia@vishay.com, DiodesEurope@vishay.com

THIS DOCUMENT IS SUBJECT TO CHANGE WITHOUT NOTICE. THE PRODUCTS DESCRIBED HEREIN AND THIS DOCUMENT ARE SUBJECT TO SPECIFIC DISCLAIMERS, SET FORTH AT www.vishay.com/doc?91000

Disclaimer

ALL PRODUCT, PRODUCT SPECIFICATIONS AND DATA ARE SUBJECT TO CHANGE WITHOUT NOTICE TO IMPROVE RELIABILITY, FUNCTION OR DESIGN OR OTHERWISE.

Vishay Intertechnology, Inc., its affiliates, agents, and employees, and all persons acting on its or their behalf (collectively, “Vishay”), disclaim any and all liability for any errors, inaccuracies or incompleteness contained in any datasheet or in any other disclosure relating to any product.

Vishay makes no warranty, representation or guarantee regarding the suitability of the products for any particular purpose or the continuing production of any product. To the maximum extent permitted by applicable law, Vishay disclaims (i) any and all liability arising out of the application or use of any product, (ii) any and all liability, including without limitation special, consequential or incidental damages, and (iii) any and all implied warranties, including warranties of fitness for particular purpose, non-infringement and merchantability.

Statements regarding the suitability of products for certain types of applications are based on Vishay's knowledge of typical requirements that are often placed on Vishay products in generic applications. Such statements are not binding statements about the suitability of products for a particular application. It is the customer's responsibility to validate that a particular product with the properties described in the product specification is suitable for use in a particular application. Parameters provided in datasheets and / or specifications may vary in different applications and performance may vary over time. All operating parameters, including typical parameters, must be validated for each customer application by the customer's technical experts. Product specifications do not expand or otherwise modify Vishay's terms and conditions of purchase, including but not limited to the warranty expressed therein.

Hyperlinks included in this datasheet may direct users to third-party websites. These links are provided as a convenience and for informational purposes only. Inclusion of these hyperlinks does not constitute an endorsement or an approval by Vishay of any of the products, services or opinions of the corporation, organization or individual associated with the third-party website. Vishay disclaims any and all liability and bears no responsibility for the accuracy, legality or content of the third-party website or for that of subsequent links.

Except as expressly indicated in writing, Vishay products are not designed for use in medical, life-saving, or life-sustaining applications or for any other application in which the failure of the Vishay product could result in personal injury or death. Customers using or selling Vishay products not expressly indicated for use in such applications do so at their own risk. Please contact authorized Vishay personnel to obtain written terms and conditions regarding products designed for such applications.

No license, express or implied, by estoppel or otherwise, to any intellectual property rights is granted by this document or by any conduct of Vishay. Product names and markings noted herein may be trademarks of their respective owners.

© 2024 VISHAY INTERTECHNOLOGY, INC. ALL RIGHTS RESERVED