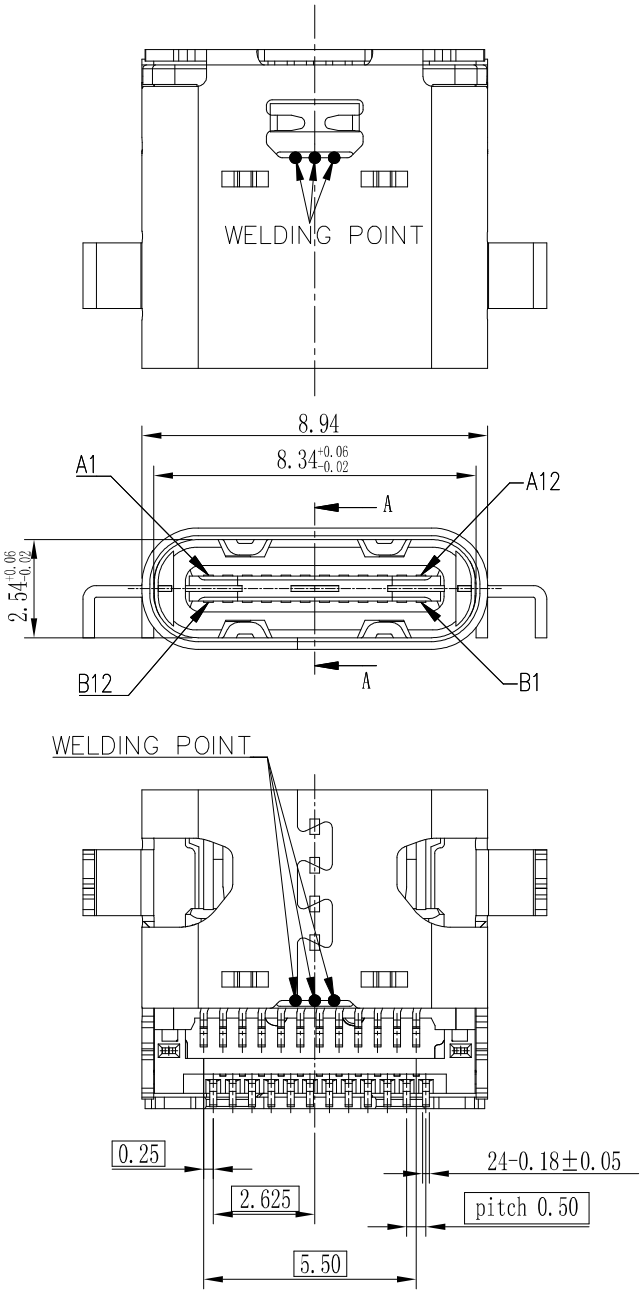

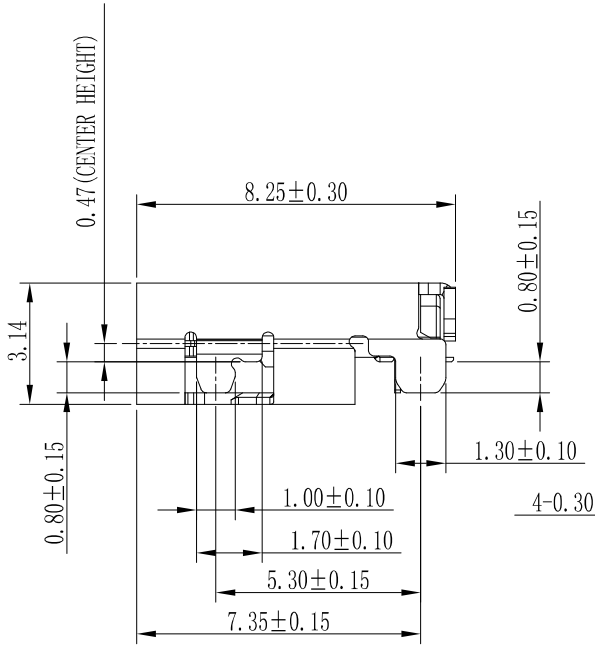

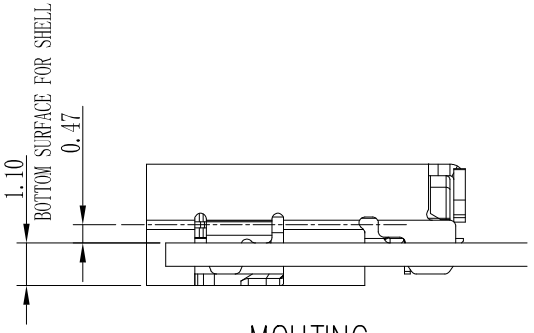

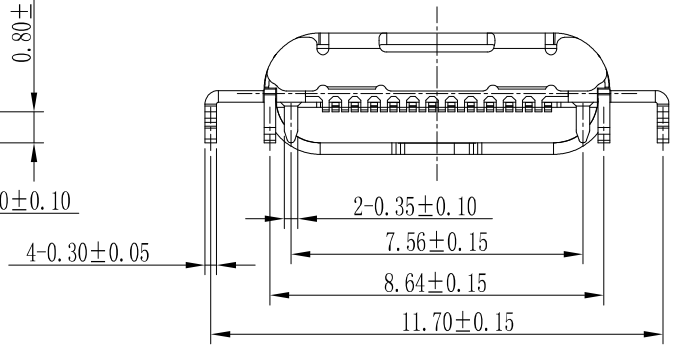

NO.	PART NAME	MATERIAL	REMARK	Q'TY
9	FINAL MOLDING	LCP UL94 V-0	BLACK	1
8	UNDER CONTACT MOLDING	LCP UL94 V-0	BLACK	1
7	UPPER CONTACT MOLDING	LCP UL94 V-0	BLACK	1
6	SHELL	STAINLESS STEEL	Ni PLATING OVERALL.	1
5	MID-PLATE	STAINLESS STEEL	Ni PLATING OVERALL.	1
4	UNDER GROUND	STAINLESS STEEL	NATURAL	1
3	UPPER GROUND	STAINLESS STEEL	NATURAL	1
2	UNDER CONTACT	COPPER ALLOY	GOLD PLATING ON CONTACT SURFACE MATTE TIN ON SOLDER TAIL NI UNDERPLATING OVERALLI	1
1	UPPER CONTACT	COPPER ALLOY		1

mat'l. code				surface ISO 1302 √	tolerance ISO 406 ISO 1101	projection	product family HPL 511
ltr	ecn no	dr	date	tolerances unless otherwise specified			title
A		TAI	2015-10-06	angles	linear ±0.3	mm	USB 3.1 Type C RECEPT. R/A MID-MOUNT, SMT AND DIP TAILS
B	ELX-N-40260-1	YY	2021-03-02	0°±3°		scale 1:1	
				dr	KENNY TAI	2015-09-21	dwg no 10137064 sheet 1 of 2 size A3
				engr	Yuan-Yuan Bao	2021-03-02	
				chr	Li-Qing Lei	2021-03-02	
				appd	Tim Yao	2021-03-02	type Product Customer Drawing
sheet index	revision sheet						

© 2016 AFCI

PDS: Rev :B STATUS:Released Printed: Mar 17, 2021

form: A3-2016-02-24

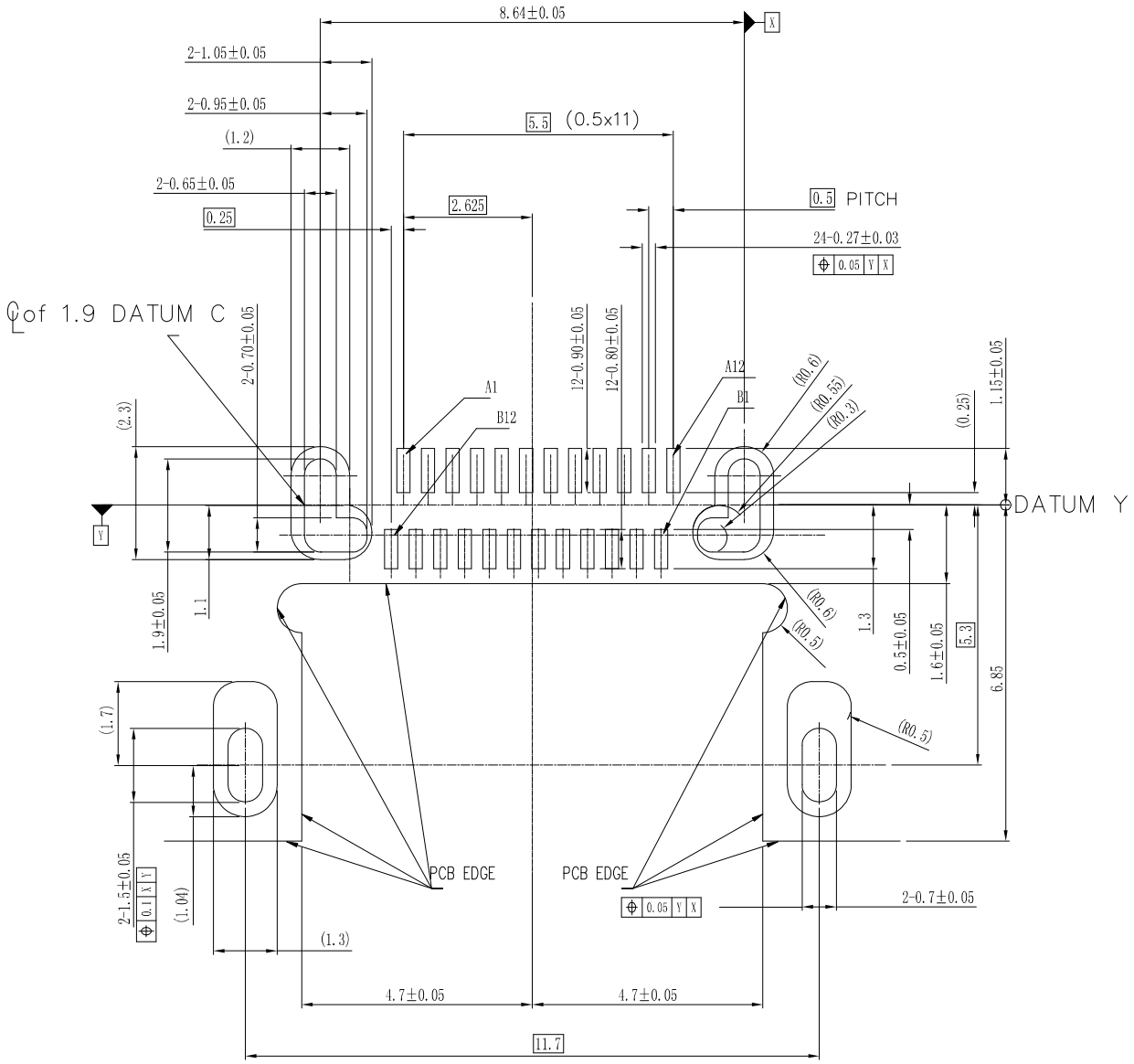

NOTES:

1. ELECTRICAL:
   - 1-1. CONTACT CURRENT RATING:
     5.0A FOR VBUS AND GND.
     (i.e., Pins A4,A9,B4,B9)
     1.25A FOR Vconn AND GND.
     (i.e., Pins B5,A1,A12,B1,B12)
     0.25A FOR ALL THE OTHERS CONTACTS.
   - 1-2. GROUND TERMINALS(A1,A12,B1,B12) & MID-PLATE & SHELL ARE SHORT TOGETHER
   - 1-3. INSULATION RESISTANCE: 100 MEGAOHMS MIN. AT 250VDC.
   - 1-4. DIELECTRIC WITHSTANDING VOLTAGE: 100VAC MIN.
   - 1-5. LOW LEVEL CONTACT RESISTANCE: INITIAL: 40mΩ MAX.; AFTER ENVIRONMENTAL TEST: MAX. CHANGE 10mΩ.
2. MECHANICAL CHARACTERISTICS:
   - 2-1. INSERTION FORCE: 5N~20N.
   - 2-2. EXTRACTION FORCE: 8N~20N FROM 1 TO 1000 CYCLES; 6~20N FROM 1001 TO 10000 CYCLES.
   - 2-3. DURABILITY: 10,000 MATING CYCLES.
   - 2-4. OPERATING TEMPERATURE: -55°C TO +85°C
3. CAPABLE TO 260°C REFLOW SOLDER FOR 10 SEC.
4. PRODUCT SPECITICATION: GS-12-1336
5. PACKAGE SPECITICATION: GS-14-2487

PART NUMBER SCHEME:
10137064-000 X X LF

CONTACT PLATING
1. GOLD FLASH
2. 30u" Au

PACKAGING
1. TAPE AND REEL

PIN NO. RECOMMENDED PCB LAYOUT

A1	A2	A3	A4	A5	A6	A7	A8	A9	A10	A11	A12
GND	SSTXp1	SSTXn1	VBUS	CC1	Dp1	Dn1	SBU1	VBUS	SSRXn2	SSRXp2	GND
GND	SSRXp1	SSRXn1	VBUS	SBU2	Dn2	Dp2	CC2	VBUS	SSTXn2	SSTXp2	GND
B12	B11	B10	B9	B8	B7	B6	B5	B4	B3	B2	B1

mat'l. code		surface ISO 1302 √	tolerance ISO 406 ISO	projection 1101	product family HPL 511	
ltr B	ecn no / dr / date	tolerances unless otherwise specified			title USB 3.1 Type C RECEPT. R/A MID-MOUNT, SMT AND DIP TAILS	
		angles 0°±3°	linear ±0.3	mm		
				scale 1:1		
		dr KENNY TAI 2015-09-21			dwg no 10137064	sheet2 of 2 / size A3
		engr Yuan-Yuan Bao 2021-03-02				
		chr Li-Qing Lei 2021-03-02				
		appd Tim Yao 2021-03-02			type Product Customer Drawing	
sheet index	revision sheet					

© 2016 AFCI

PDS: Rev :B STATUS:Released Printed: Mar 17, 2021