MACX MCR-SL-CAC- 5-I-UP - Current measuring transducer

2810625

https://www.phoenixcontact.com/us/products/2810625

Please be informed that the data shown in this PDF document is generated from our online catalog. Please find the complete data in the user documentation. Our general terms of use for downloads are valid.



Current measuring transducer for 1 A and 5 A AC, the output signal 0...20 mA or 4...20 mA, can be configured using a DIP switch with an operating mode indication through an LED

Product description

The MACX MCR-SL-CAC-5-I(-UP) current measuring transducers convert sinusoidal alternating currents of 1 A or 5 A into standard analog signals 0...20 mA or 4...20 mA. The DIP switches, which can be accessed on the upper side of the housing, can be used to configure the input and output current.
The MACX MCR-SL-CAC-5-I current transducer contains a supply voltage range of 19.2 V DC to 30 V DC.
The MACX MCR-SL-CAC-5-I current transducer contains a long range version with a supply voltage range of 19.2 V AC/DC to 253 V AC/DC.

Your advantages

- Input/output can be configured via DIP switches

Commercial data

Item number	2810625
Packing unit	1 pc
Minimum order quantity	1 pc
Sales key	C444
Product key	CMMA21
GTIN	4046356153782
Weight per piece (including packing)	218.2 g
Weight per piece (excluding packing)	181.6 g
Customs tariff number	85437090
Country of origin	DE

Technical data

Notes

Utilization restriction

EMC note	EMC: class A product, see manufacturer's declaration in the download area

Product properties

Product type	Current measuring transducer

Insulation characteristics

Overvoltage category	III
Pollution degree	2

Electrical properties

Maximum power dissipation for nominal condition	< 0.9 W (24 V DC)
	< 3.4 W (230 V AC)
Protective circuit	Surge protection; 35 V suppressor diode
Step response (10-90%)	≤ 300 ms
	200 ms
Maximum temperature coefficient	< 0.02 %/K
Temperature coefficient, typical	< 0.015 %/K
Maximum transmission error	≤ 0.5 % (of nominal range value under nominal conditions)
Reverse polarity protection	yes
Rated insulation voltage	300 V AC (to earth)

Electrical isolation Input/output

Test voltage	4 kV AC (50 Hz, 60 s)

Electrical isolation Output/supply

Test voltage	2 kV AC (50 Hz, 60 s)

Supply

Supply voltage range	19.2 V AC/DC ... 253 V AC/DC
Max. current consumption	< 33 mA (24 V DC)
Power consumption	< 0.8 W (24 V DC)

Input data

Measurement

Configurable/programmable	Via DIP switches
Input current range	0 A AC ... 1 A AC (configurable)
	0 A AC ... 5 A AC (configurable)
Voltage input signal	≤ 300 V AC
Input impedance	< 50 mΩ
Overload capacity	2 x $I_{N\ (}$continuous)

Surge strength	20 x I_N (1 s)
Nominal frequency f_N	50 Hz
Frequency measuring range	45 Hz ... 65 Hz
Curve type	Sine

Output data

Signal: Current

Configurable/programmable	Via DIP switches
Open-circuit voltage	15 V
Current output signal	0 mA ... 20 mA (configurable)
	4 mA ... 20 mA (configurable)
Max. current output signal	25 mA
Load/output load current output	< 500 Ω (20 mA)
Ripple	< 10 mV_{PP} (500 Ω / 20 mA)
Status display	LED red (error), LED green (ready)

Connection data

Connection method	Screw connection
Stripping length	8 mm
Screw thread	M3
Conductor cross-section rigid	0.2 mm² ... 2.5 mm²
Conductor cross-section flexible	0.2 mm² ... 2.5 mm²
Conductor cross-section AWG	24 ... 14
Tightening torque	0.5 Nm ... 0.6 Nm

Interfaces

Data communication (bypass)

Limit frequency (3 dB)	approx. 3 Hz

Dimensions

Item dimensions

Width	22.5 mm
Height	104 mm
Depth	114.5 mm

Material specifications

Color	gray (RAL 7042)
Housing material	Polyamide PA non-reinforced

Environmental and real-life conditions

Ambient conditions

Degree of protection	IP20
Ambient temperature (operation)	-20 °C ... 65 °C

	-4 °F ... 149 °F
Ambient temperature (storage/transport)	-40 °C ... 85 °C (-40 °F ... 185 °F)
Altitude	≤ 2000 m
Permissible humidity (operation)	10 % ... 95 % (non-condensing)

Approvals

CE

Certificate	CE-compliant

ATEX

Identification	Ex II 3 G Ex nA IIC T4 Gc X

UKCA Ex (UKEX)

Identification	Ex II 3 G Ex nA IIC T4 Gc
Certificate	PxCIF21UKEX2810638X

UL, USA/Canada

Identification	UL 508 Recognized

EAC Ex

Identification	EAC Ex Ex nA IIC T4 Gc
Certificate	BY/112 02.01 TP012 103.01 00078

EMC data

Electromagnetic compatibility	Conformance with EMC directive
Noise immunity	EN 61000-6-2
Note	When being exposed to interference, there may be minimal deviations.

Noise emission

Standards/regulations	EN 61000-6-4

Electrostatic discharge

Standards/regulations	EN 61000-4-2

Electromagnetic HF field

Standards/regulations	EN 61000-4-3

Electromagnetic HF field

Comments	Criterion A

Fast transients (burst)

Standards/regulations	EN 61000-4-4

Fast transients (burst)

Comments	Criterion B

Surge current load (surge)

Standards/regulations	EN 61000-4-5

Surge current load (surge)

Comments	Criterion B

Conducted interference

Standards/regulations	EN 61000-4-6

Mounting

Mounting type	DIN rail mounting
Mounting position	any

Drawings

Dimensional drawing

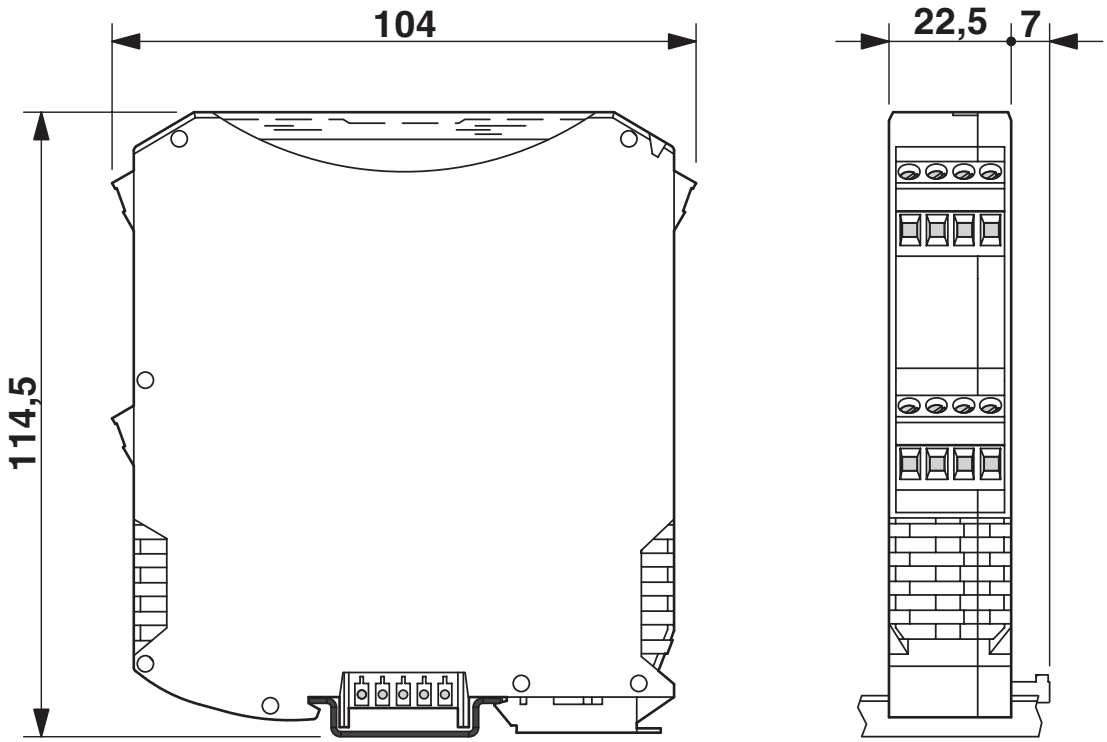

Application drawing

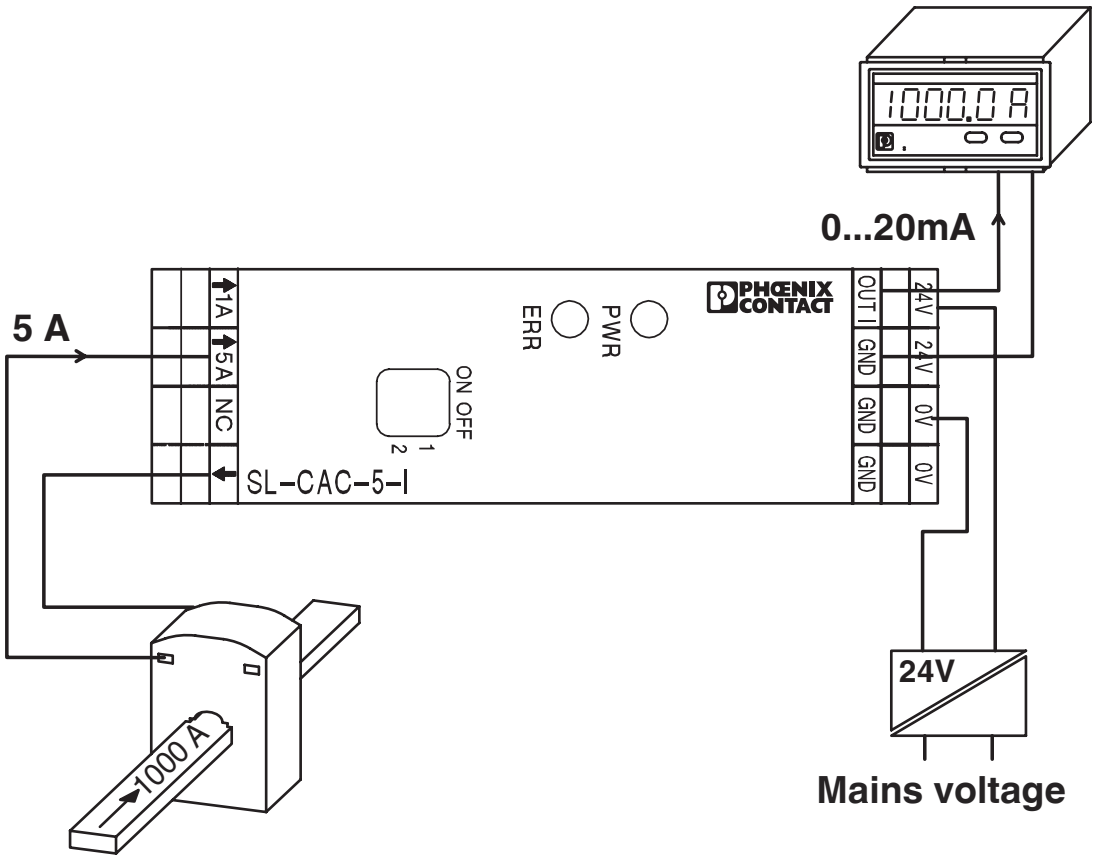

Current measurement

Approvals

To download certificates, visit the product detail page: https://www.phoenixcontact.com/us/products/2810625

cUL Recognized
Approval ID: E238705

UL Recognized
Approval ID: E238705

Classifications

ECLASS

ECLASS-13.0	27210123
ECLASS-15.0	27210123

ETIM

ETIM 9.0	EC002475

UNSPSC

UNSPSC 21.0	39121000

Environmental product compliance

EU RoHS

Fulfills EU RoHS substance requirements	Yes
Exemption	7(a), 7(c)-I

China RoHS

Environment friendly use period (EFUP)	EFUP-50
	An article-related China RoHS declaration table can be found in the download area for the respective article under "Manufacturer declaration". For all articles with EFUP-E, no China RoHS declaration table issued and required.

EU REACH SVHC

REACH candidate substance (CAS No.)	Lead(CAS: 7439-92-1)
	6,6'-di-tert-butyl-2,2'-methylenedi-p-cresol(CAS: 119-47-1)
SCIP	c9f74c8d-84c2-4ed8-a1e4-ba93c26a3078

Phoenix Contact 2025 © - all rights reserved
https://www.phoenixcontact.com

Phoenix Contact USA
586 Fulling Mill Road
Middletown, PA 17057, United States
(+717) 944-1300
info@phoenixcon.com