REVISIONS				
REV.	ECO	DESCRIPTION	DATE	APPROVED
A	–	RELEASED	18FEB2020	TN

SD-WTD-107
RELAY, ONE SHOT, 3S

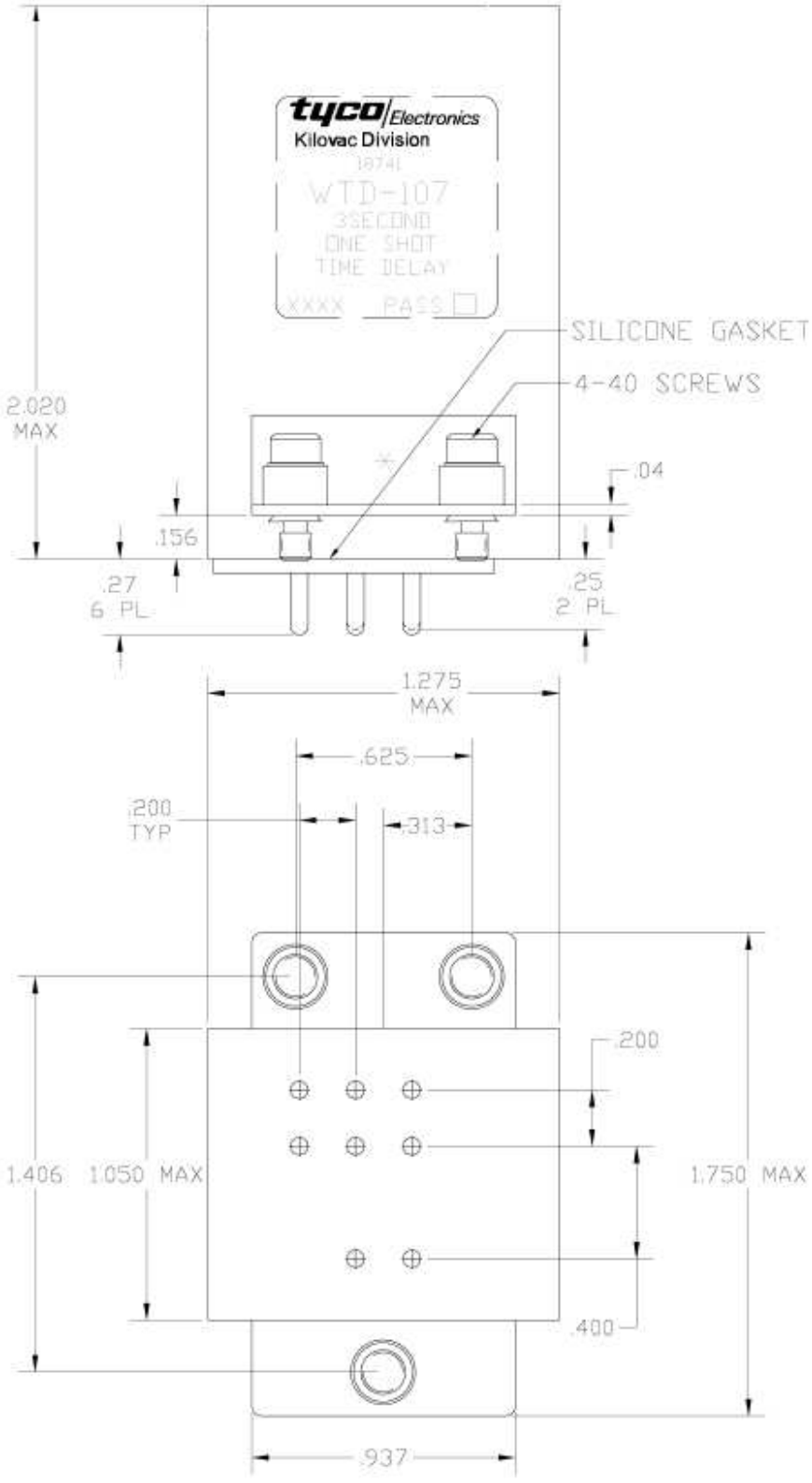

ALL DIMENSIONS ARE IN INCHES

TE CONNECTIVITY
175 N, DIAMOND STREET MANSFIELD, OHIO 44902

TITLE: RELAY, ONE SHOT, 3S

DWG NO.: SD-WTD-107

DS	DATA SHEET	CAGE CODE	SCALE	SHEET	REV
		18741	NONE	1 OF 2	A

GENERAL SPECIFICATION

CONTROL VOLTAGE:	20 TO 29VDC
CURRENT CONSUMPTION:	100mA MAX @29VDC
ON TIME:	3 SEC ± 1SEC
DELAY BEFORE ON:	150mSEC. ± 30mSEC
OPERATION:	WITH CONTROL VOLTAGE APPLIED BETWEEN +C1 AND −B1, THE RELAY WILL ENERGIZE FOR THE SET ON TIME
CONTACT FORM:	SPDT
CONTACT RATING:	5A INDUCTIVE @ 28 Vdc, 200mH
CONTACT LIFE:	50,000 CYCLES MIN
AMBIENT TEMP OPER.:	−55°C TO +71°C
VIBRATION:	10−2000Hz, 20G's
SHOCK:	50G's, 11±1ms 1/2 SINE, 3 AXIS
ALTITUDE:	SEA LEVEL TO 70,000 FT
HUMIDITY:	PER MIL−STD−83726
SALT SPRAY:	PER MIL−STD−83726
WEIGHT:	3oz MAX
CONSTRUCTION:	HERMETICALLY SEALED STEEL HOUSING
FINISH:	NICKEL PLATED

RELAY MODEL NO. : WTD−107 TE P/N: 3−1618389−6

SCHEMATIC

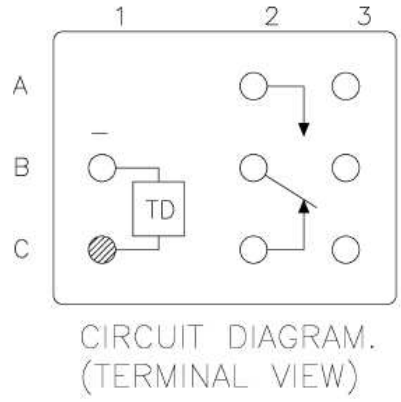

CIRCUIT DIAGRAM.
(TERMINAL VIEW)

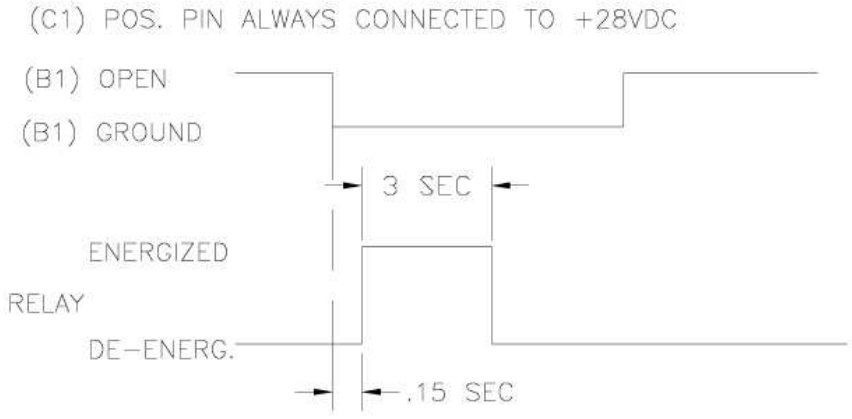

TE CONNECTIVITY
175 N, DIAMOND STREET MANSFIELD, OHIO 44902

TITLE: RELAY, ONE SHOT, 3S

DWG NO.: SD−WTD−107

THIRD ANGLE PROJECTION	THIS DRAWING PREPARED IN ACCORDANCE WITH ANSI/ASMEY14.5M−1982	CAGE CODE	SCALE	SHEET	REV
		18741	NONE	2 OF 2	A